M A N U A L

Digital Battery Servo Amplifier
BAMOCAR-PG-D3-700-100/160

for EC servo motors
for EC asynchronous servo motors

UNITEK
Industrie Elektronik
G m b H

Hans-Paul-Kaysser-Straße 1
71397 Leutenbach-Nellmersbach

Tel.: 07195 / 92 83 - 0
contact@unitek.eu
www.unitek.eu

Version

2023 / V1

Contents

1. Basic - Information

1.1 Further UNITEK products

For synchronous and asynchronous motors			
Digital AC-servo amplifiers (mains up to 480V~)		UNITEK	DS205, DS403, DPCxx
Digital AC-servo amplifiers for battery operation		UNITEK	Series BAMOBIL-D3
Analog three-phase servo amplifier (mains 400V~)		UNITEK	Series TVD
For dc motors			
Analog DC-servo amplifier for battery operation			Series BAMOBIL-A
Analog DC-servo amplifier (operation via the mains)		UNITEK	Series TV
Thyristor current converter 1Q, 4Q, servo		UNITEK	Classic series 200 W to 800 kW

1.2 Engineering instructions (MANUAL)

1.	MANUAL	BAMOCAR-PG-D3-700-100/160	Hardware
2.	MANUAL	NDrive x	Software

Use all MANUALS for the engineering, the installation and the commissioning!

Download: www.unitek.eu

The hardware MANUAL comprises warning and safety advices, explanations of standards, mechanical and electrical installation advices.

The MANUAL must be available for all persons who are concerned with the unit.

1.3 Designations and symbols

Unit:	BAMOCAR-PG-D3-700-100/160
User:	Vehicles, boats, manufacturers or operators of machines or installations in the industrial sector (B2B, secondary environment).
Manufacturer:	UNITEK Industrie Elektronik GmbH
Dealer:	
	**Caution – Danger to life! High voltage!**
	**Warning! Important!**
	**Dangerous electric fields!**

Scope of delivery/included in the packaging:
- BAMOCAR-PG-D3-700-100/160

Not included/cannot be ordered from UNITEK:
Accessory connectors and cable glands.

35-pin connector type: Typo 776164-1
14-pin connector type: Typo 776273-1
Cable gland: M25x1.5

1.4 General product information

The digital 3-phase current servo amplifiers **BAMOCAR-PG-D3-700-100/160** in combination with the motor provide a 4-quadrant drive which can be used in both rotation directions for drive operations and brake operations with energy feed-back. According to the installed parameter components the amplifiers are suitable for EC synchronous motors, ac asynchronous motors, or dc motors.

The individual drive versions have different advantages and disadvantages.

The **EC drive** (synchronous motors) has the highest efficiency and performance per weight and volume and provides a drive solution free of maintenance and with a wide dynamic control range. However, the high braking torque in case of motor short-circuits is a disadvantage and it is also difficult to control the field weakening range. From the electrical view, the EC synchronous motor (brushless dc motor) is a synchronous motor with a permanent magnet rotor and a three-phase current stator.
The physical characteristics correspond to those of dc motors, i.e., the current is proportional to the torque and the voltage is proportional to the speed. The speed is steadily controlled up to the current limit (max. torque). In case of an overload the speed drops and the current remains constant.
The speed/torque characteristic is rectangular.
Current, speed, and position are precisely measured. The field frequency is not controllable, it is automatically adjusted.
The motor voltages and the motor currents are sinusoidal.

The **ac drive** (asynchronous motors) has the widest speed range due to the single field weakening and there is no braking torque in case of a motor circuit. However, the unit size and the worse efficiency is a disadvantage. The rotating field frequency can be controlled in due consideration of the motor specific parameters (field-based control). The motor voltages and motor currents are sinusoidal.
With both 3-phase current systems there will be no motor movement neither when the rotating field is switched off nor in case of an output stage damage. Most of the heat losses are generated in the motor stator.

The **dc drive** (dc motor) has the most uniform running and a wide control range. It is possible to provide an emergency operation by directly connecting the battery voltage. The carbon brushes and the heat development in the armature are disadvantages. The drive may run at high speed in case of an output stage damage.
The current is proportional to the torque and the voltage is proportional to the speed.
Current, speed, and position are precisely measured. The speed is steadily controlled up to the current limit (max. torque). In case of an overload the speed drops and the current remains constant. The speed/torque characteristic is rectangular. Field weakening might occur with separately excited motors.

The **BAMOCAR-D3-700-100/160** can be used as position amplifier or torque or speed amplifier.
The speed actual value is generated in the encoder unit (resolver or others) or internally generated (without sensors). It is necessary to provide an encoder system for wide control ranges and high control dynamics.

Warning/Attention:

For dc, ac, or bl-servo amplifiers which are supplied via the dc mains, it must be checked that the energy is fed back into the bus during brake operation.
(External ballast circuit)

1.5 Application/build/features

Application:
In all kinds of vehicles, boats, machines, and installations with a drive power of 100kW under hard application conditions, especially as 4Q-servo-drive for
- highly dynamic acceleration and braking cycles
- a wide control range
- a high efficiency
- small motor dimensions
- a uniform, accurate and smooth running
- for the speed or torque control or combined speed/torque control incorporated within or independent of position control loops. For drives with constant speed as in conveyors, spindle drives, pumps, transversal or longitudinal pitch drives, synchronous multiple motor drives.

Particularly suitable for:
Battery-driven vehicles such as electric vehicles and boats, forklifts, transportation systems as well as battery-supplied machines and installations such as assembly machines, metal working machines, food processing machines, robots and handling systems, conveyors, stone working machines, and for many other battery-supplied applications.

Build:
-Robust unit for switch cabinet mounting according to the VDE, DIN and EC regulations, protection rating **IP65** (option IP69K)
-for rough ambient conditions and high dynamic overloads
-maintenance-free
-power connections protected against accidental contact with exposed parts
-power electronics for (S1 operation) 50 $A\sim_{eff}$, 80 $A\sim_{eff}$
-power input range nom. 12..700 V=
-liquid cooling (special version air cooling)
-standard digital control electronics
-Independent 12..24 V chopper power supply unit for the auxiliary voltages

Galvanic isolation between:
- power connection, motor connection, and all other control connections
- auxiliary connection and all other voltages
- housing and heat sink
- the distances of air gaps and leakage paths adhere to the EU standards
- no internal isolation watchdog, Y2 capacitors to the housing

Components:
- Completely isolated IGBT power semi-conductors, comfortably over-dimensioned
- Only components customary in trade and industrially standardised are used
- SMD equipment

Characteristics:
Battery connection 12 V=..700 V= (dc mains, take restrictions into account)

- ✓ Independent auxiliary voltage connection 24 V= (12 V variant available on request)
- ✓ Digital interfaces RS232, CAN BUS (further option)
- ✓ analogue inputs, programmable differential inputs
- ✓ Digital inputs/outputs, programmable, optically de-coupled
- ✓ Linear command value ramp
- ✓ Logic for enable and the output stage switch, emergency stop function, safety
- ✓ BTB ready for operation, solid state relay contact
- ✓ Position, speed and torque control
- ✓ Feedback encoder systems: resolver, incremental encoder, SINCOS 1 Vss, rotor position + bl tacho
- ✓ Static and dynamic current limiting
- ✓ Uniform, completely digital control unit
- ✓ Processor-independent hardware switch-off in case of over-voltage, under-voltage, short-circuits, circuits to earth, and over-temperature at the amplifier or motor
- ✓ Intrinsically safe and short-circuit proof power section (EN50178)

Attention: Braking energy

The braking energy is fed to the battery.
The battery must absorb the braking energy.
If the battery is disconnected from the device during the braking process,
high bus circuit voltages might occur.

Pay particular attention when used with laboratory power supplies.

For dc mains the braking energy must be absorbed in the mains without the voltage exceeding the permissible value. If this cannot be guaranteed, a ballast circuitry must be used.

For non-earthed systems (vehicles, boats, machines)
the isolation between parts accessible to touching and high voltages must be guaranteed and monitored by using independent isolation monitors.

1.6 Safety regulations

In principle electronic equipment is not fault proof!

Caution - High voltage
DC > 800 V=
Shock hazard! / Danger to life!
Discharge time of the bus circuit > 4 min.

Before installation or commissioning begins, this manual must be thoroughly read and understood by the skilled technical staff involved. It must be ensured that the documentation (manuals) and thus, the knowledge of the unit and especially the safety advices must be available for all persons who are concerned with the unit
If any uncertainty arises or if any function is not or not sufficiently described in the documentation, the manufacturer or dealer should be contacted.
Any incorrect installation/connection may damage the device!
Any incorrect programming may cause dangerous movements!

Intended applications:

The devices of the **BAMOCAR-D3-700-100/160** are power electric parts used for regulating energy flow. They are designed as components to control EC synchronous motors, ac asynchronous motors in vehicles, machines, or installations.
For applications in residential areas additional EMC measures are necessary.
Any other type of application must be approved by the manufacturer.
The user must draw up a hazard analysis for his end product.

Protection rating IP65 (Option IP69K)

Connection only to batteries!

Operation only allowed when the device is closed!
Control and power connections can carry dangerous voltages even if the drive is inoperative!
The minimum discharge time of the bus circuits is superior to 4 minutes!
Measure the voltage before any disassembly!

The user must draw up a hazard analysis for his machine, vehicle, or installation.

<u>The user must ensure that in the event of:</u>

- device failure
- incorrect operation,
- loss of regulation or control

the axis will be safely de-activated.

It must also be ensured that the vehicles, machines, equipment, or vehicles are fitted with device independent monitoring and safety features.
The user must take appropriate measures so that man as well as property are not exposed to danger due to incorrect or improper movements at any time!

During operation, the device must be closed.
All plugged connectors must be snapped properly or secured by screws.
The safety systems must be enabled.

When the device is open and/or the safety systems are de-activated, it must be ensured by the operator that only skilled and suitably trained personnel has access to the units.

Assembly
- should only be carried out when all voltages have been removed and the units are secured
- should only be carried out by suitably trained personnel

Installation
- should only be carried out when all voltages have been removed and the units are secured
- should only be carried out by suitably trained personnel for electrics
- should only be carried out in accordance with health and safety guidelines

Adjustments and programming
- should only be carried out by suitably trained personnel with knowledge in electronic drives and their software
- should only be carried out in accordance with the programming advice
- should only be carried out in accordance with health and safety guidelines

1.7 Commissioning

The battery servo amplifiers **BAMOCAR-PG-D3-700-100/160** are components of the electronic drive technology.

They are functional only in connection with an electrical consumer (e.g. a motor).

Their use is limited for commercial applications.

When mounting the units into vehicles, boats, machines, and installations the proper operation of the units may not be started until it is ensured that the machine, the installation, or the vehicle comply with the regulations of the EC machinery directive 2006/42/EG and the EMC guideline 2004/108/EG.

On the installation and test conditions described in the chapter 'EMV advices' it is adhered to the EC guideline 2004/108/EG including the EMC standards EN61000-2 and EN61000-4.

For applications in residential areas additional EMC measures are necessary.

A manufacturer's declaration can be requested.

The manufacturer of the machine or installation is responsible for observing the threshold values demanded by the EMC laws.

1.8 Safety advices

Machinery directive
The manufacturer of the machine or installation must draw up a hazard analysis for his product. He must make sure that any unpredictable movements do not cause damage neither to persons nor to property.

Skilled personnel

Hardware
The skilled qualified personnel must feature a training and instruction for an assignment in the field of electronic drive engineering. They must have knowledge of the standards and accident prevention regulations for drive engineering applications and they must be familiar with this field of activity. Eventually occurring dangerous situations are realized.
The local regulations (IEC, VDE, VGB) are known to the qualified personnel and they are observed during the works.

Software
The skilled qualified personnel for handling the software must be trained to safely program the units in the machines and installations. Incorrect parameter settings may cause improper and impermissible movements. Any parameter settings have to be checked for faulty operation. Acceptance tests must be thoroughly carried out according the four-eyes principle

Working environment
Incorrect handling of the units may cause damage to persons or property.
The units must be closed during operation.
Any unit covers must not be removed.
Disconnect the power supply prior to any works on electric connections. It must be ensured the battery voltage is safely switched off.
Any voltages and residual voltages (buffer circuit) must be measured prior to any works on the unit.
Max. permissible voltage < 42 V.
High temperatures > 70 °C may arise.
The working environment may be dangerous for persons having electronic medical aids or appliances (e.g. cardiac pacemakers). Sufficient distance to these electrical parts must be observed.

Exposure
During transport and storage the prescribed and specified climatic conditions must be adhered to.
The units must not be mechanically damaged. Warped and bent housing parts may influence or damage the isolation distances. Damaged units must never be installed!
The units comprise parts which may be damaged by electrostatic discharge. The general recommendations for handling electrostatic devices must be observed. Special attention should be paid to strongly isolating plastic films and synthetic fiber.
For the operation it must be ensured that the environmental conditions in the switch cabinet are adhered to. This applies in particular to the impermissible condensation on the units.

1.9 Intended applications

The devices are designed as components to control EC synchronous motors and ac asynchronous motors in vehicles, boats, machines, or installations.
Any other type of application must be approved by the manufacturer.

Protection rating IP65 (Option IP69K).

The devices must only be mounted in vehicles, boats, machines, or installations.
For applications in residential areas additional EMC measures are necessary.

The user must draw up a hazard analysis for his end product.

Power connection only to batteries with charging current limiting on the battery side.
Isolation watchdogs must be installed for voltages > 60 V.

The user must ensure that the complete control wiring complies with the standards.

It must be paid attention to the equipotential bonding for components which are connected to the unit and which do not have isolated inputs and outputs (equalizing connection GND). The equalizing currents may destroy components and parts.

When measuring the isolation the units must be disconnected or the power connections must be bridged together and the control connections must be bridged together.

Non-observance will cause damage to the semi-conductors in the unit.

Repeating circuits to earth and short circuits the values of which are all below the response threshold for short circuits may cause damage to the output stages (restrictedly short-circuit proof acc. to standard EN 50178, EN61800-5-1).

Impermissible applications:
- In life-sustaining medical devices or machines.
- Connection to power supply units or dc power supplies without protection circuits.
- In explosive environments.
- In environments with acrid fumes.

1.10 Regulations and guidelines

The device and its associated components can only be installed and switched on where the local regulations and technical standards have been strictly adhered to:

EG Guidelines	2004/108/EG, 2006/95/EG, 2006/42/EG, 2002/96/EG
EG Standards	EN60204-1, EN292, EN 50178, EN60439-1, EN61800-3, ECE-R100
International standards	ISO 6469, ISO 26262, ISO 16750, ISO 20653, ISO 12100
IEC/UL	IEC 61508, IEC364, IEC 664, UL508C, UL840
VDE Regulations and TÜV Regulations	VDE 100, VDE 110, VDE 160
Regulations of the statutory accident insurance and prevention institution	VGB4

EU standards and regulations observed for the components of the unit

Standard	Description	Version
EN 60146-1,-2	Semiconductor converters	2010
EN 61800-1,-2,-3	Speed-variable electrical drives	2010
EN 61800-5-1	Electric power drive systems	2010
EN 60664-1	Isolation coordinates - low voltage	2012
EN 61010	Safety regulations - control units	2011
EN 61508-5	Functional safety of electric, electronic systems	2011
EN 60068-1,-2	Environmental influences	2011
ISO 20653	Type of protection of the electrical equipment of vehicles	
ISO 26262	Functional safety of electric vehicles	2011
ECE-R100	Conditions for battery-driven electric vehicles	
UL 508 C	UL Regulations - converter	2002
UL 840	UL Regulation - clearance and creepage distances	2005

EU standards and regulations which must be observed by the user

Standard	Description	Version
EN 60204	Safety and electrical equipment of machines	2011
EN 50178	Equipment of power plants	1998
EN 61800-3	Speed-variable electric drives - EMC	2010
EN 60439	Low voltage switching device combinations	2011
EN 1175-1	Safety of electric industrial trucks	2011
ISO 6469	Electric road vehicles	2009
ISO 26262	Functional safety of electric road vehicles	2011
ISO 16750	Electrical components - vehicles	2010
ISO 12100	Safety of machines	2011
ISO 13849	Safety of machines and controls	2011
IEC 364	Protection against electric shocks	2010
IEC 664	Isolation coordinates - low voltage	2011

1.11 Risks

The manufacturer aims to keep the remaining risks emanating from the unit as low as possible by means of constructive, electrical, and software measures.

In the field of drive engineering the following known remaining risks must be considered regarding the risks arising from machines, vehicles, and installations.

Impermissible movements
caused by:

- failure of safety watchdogs or switched-off safety watchdogs during commissioning or repair works
- software errors in upstream controls, errors in bus systems
- non-monitored hardware and software errors in actuating elements and connecting cables
- inverted sense of control
- faults during the parameter setting and wiring
- limited response time of the control features. Ramps, limits
- operations not permitted in the specifications
- electromagnetic interferences
- electrostatic interferences, lightning strikes
- failure of components
- failure in the brakes

Dangerous temperatures
caused by:

- faults during the installation
- faulty connections, bad contacts, aging
- faults in the electric safety system, incorrect types of fuses
- operations not permitted in the specifications
- negative climatic conditions, lightning strikes
- failure of components

Dangerous voltages
caused by:

- faulty earthing of the unit or motor
- faulty insulation monitoring
- faulty connections, bad contacts, aging
- faulty potential isolation, failure of components
- conductive contamination, condensation

Dangerous fields
The units, the inductive and capacitive accessories as well as the power wiring can generate strong electric and electromagnetic fields. These fields may be dangerous for persons having electronic medical aids or appliances (e.g. cardiac pacemakers). Sufficient distance to these electrical parts must be observed.

Any designated assembly area must be indicated and labelled accordingly.

1.12 Technical data

For three-phase current motors

Data BAMOCAR-D3	Dim.	700-100	700-160
Auxiliary voltage	V=	24 V = ±10 % / peak 2 A Residual ripple < 10 % (self-healing fuse) (12 V / 4 A variant only on request)	
Supply voltage	V=	12 to 700	
Max. output voltage	V~eff	3 x 7 to 3 x 480	
Continuous current	$A\sim_{eff}$	50	80
Continuous power	kW	35	50
Max. peak current	A_{lo}	100	160
Max. peak current	$A\sim_{eff}$	71	113
Max. peak power	kW	52	75
Max. power loss	W	400	850
Pulse frequency	kHz	Programmable 8 - 16	
Rotation frequency	Hz	600	
Over-voltage switching threshold	V=	Programmable up to 740 V	
Input fuse	A	160	250
Bus circuit capacity	µF	75	
Weight	kg	total weight 3,5 kg	
Dimensions h x w x d	mm	280 x 200 x 90	

Control signals		V	A	Function	Connector
Analogue inputs		±10	0.005	Differential input	X1
Digital inputs	ON OFF	10-30 < 6	0.010 0	Logic IO	X1
Digital outputs		+24	1	Transistor output open emitter	X1
Analog output		±10		Operational amplifier	X1
Resolver / TTL / SINCOS				Differential input	X7
CAN interface				Logic IO	X1
RS232 interface				Logic IO	X1

Ambient conditions	
Protection rating:	IP 65 (option IP69K)
Standards:	EN60204, ISO 16750 , EN61800, IEC60146
Over-voltage:	700 V DC +10 %
Operating temperature range:	-30°C to +85°C
Storage and transport:	-30°C to +85°C EN60721
Installation altitude:	≤ 1000m above sea level 100 %, >1000m performance reduced by 2 %/100 m
Cooling:	Liquid cooling unit -30°C to max. 65°C, 12 l/min, pressure max.6 bar, > 65°C performance reduced by 2 %/°C
Mounting position:	independent
Contamination:	Contamination degree 2 acc. to EN 61800-5-1
Vibration:	10.. 58Hz ampl. 0.075 mm acc. to IEC 60068-2-3 58.. 200 Hz 1 g
Shock:	15 g for 11 ms
Environmental conditions:	**Not permissible:** Condensation, ice formation, oil mist, salt spray, steam
Humidity:	class F, humidity < 85 % **condensation not allowed!**

Current reduction (torque reduction)

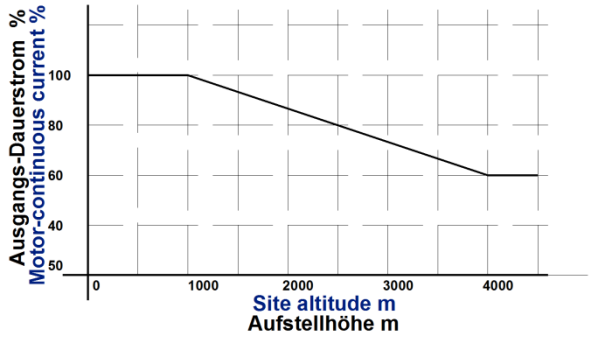

Only with air cooler
Permissible current limit depending on
to the installation height (not automatically, but must be observed by the user).

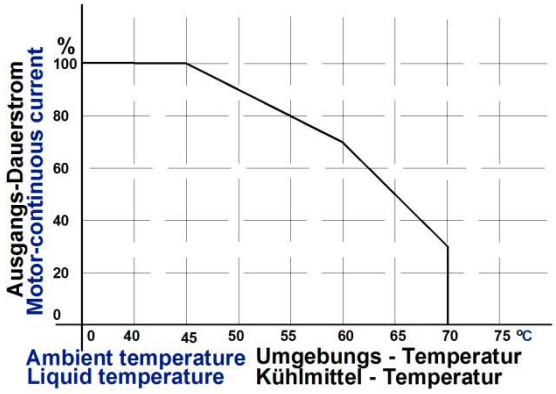

Only with air cooling
Permissible current limit depending on the ambient temperature

With liquid cooling
Permissible current limit depending on the temperature of the cooling agent

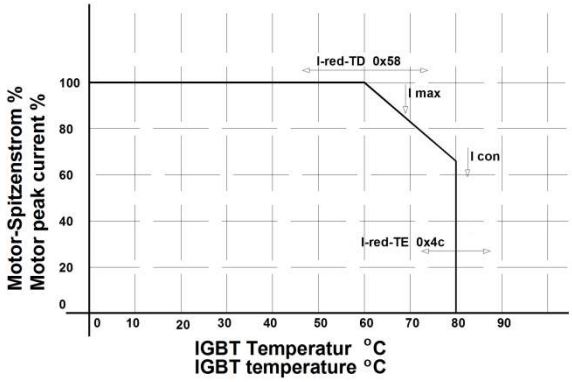

Dependence on IGBT module temperature

Starting temperature of the reduction
I-red-TD 0x58

Final temperature of the reduction
I-red-TE 0x4c

Protection limits
Warning from 0x4A =24600 Num
Switch-off at 0x4A = 25200 Num

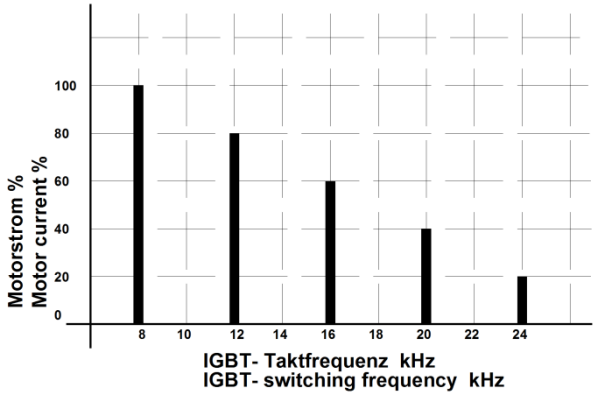

Automatic current reduction
depending on the pulse frequency

2 Mechanical installation

2.1 Important

Check the device for mechanical damage.
Only devices in perfect working order can be mounted.

Disconnect the power supply prior to any assembly.
Disconnect the positive and the negative battery pole and the dc mains.
The device must only be mounted by suitably trained personnel.

The mounting position of the devices with a liquid cooling unit is arbitrary.

If the heat is not dissipated sufficiently the device switches off via its temperature watchdog.

Any bore hole dimensions for the fixation of the device must be taken from the dimension diagrams or from the drilling plan.
Do not mark off the unit.

The line shields and the mounting plate must have surface-to-surface contact.

The power supply lines (battery line and motor line) must be routed separately from each other.
Observe the min. line cross-section.

A safe earth connection must be provided between the housing and the mass level (vehicle chassis earth, earth of the switch cabinet)

Unshielded cable heads must be kept short.

Only use specified connectors.

Use vibration-proof screw connections.

Note:
Power supply cables between the BAMOCAR and the battery must be as short as possible.
Long cables cause dynamic voltage drops due to the line impedance and as a consequence the service life of the installed capacitors would be reduced.

2.2 Dimensions BAMOCAR-PG-D3-700-100/160

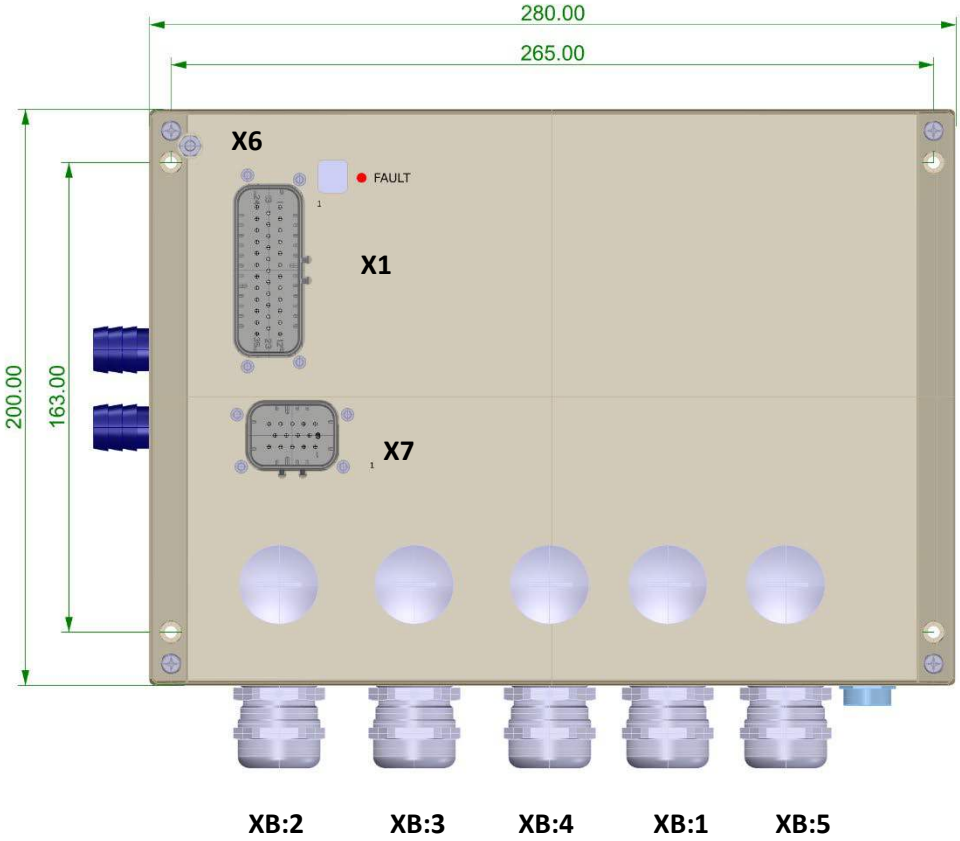

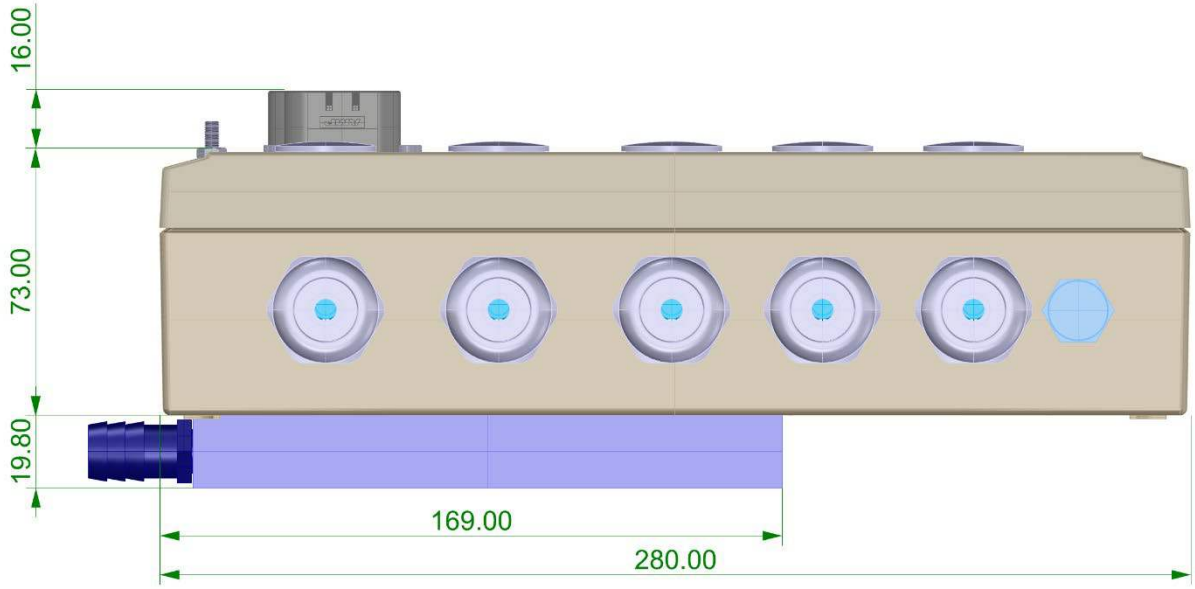

Installation depth due to Tyco connectors and cables 150 mm

Mounting screws: M4 x 40
Spacer rollers: 10 x 20 inside 5

Cable glands M25 x 1.5 and Tyco connectors are not included in the scope of delivery.

Coolant down to -40 degrees (water + glycol)

Liquid cooling:		**Power connection:**
Hose connection:	Metall G¼-13	Screws for power connections: hexagon socket M6 x 8 / max. tightening
Input temperature:	< 65 °C	torque 7 Nm
Flow rate:	6-12 l / min	PG cable entry metal M25 x 1.5 With screen insert
Pressure:	max. 6 bar	Cable diameter max. 16 mm
Pressure loss (10l/min):	max. 0,3 bar	Recommended cable glands:
Thermal resistance:	0,032 K/W	Lapp-SKINTOP-MS-x
Weight:	0,3 kg	Pflitsch-Blueglobe TRI

2.3 Dimensions optional cooling contact plate

Fixing screws: M4 x 40

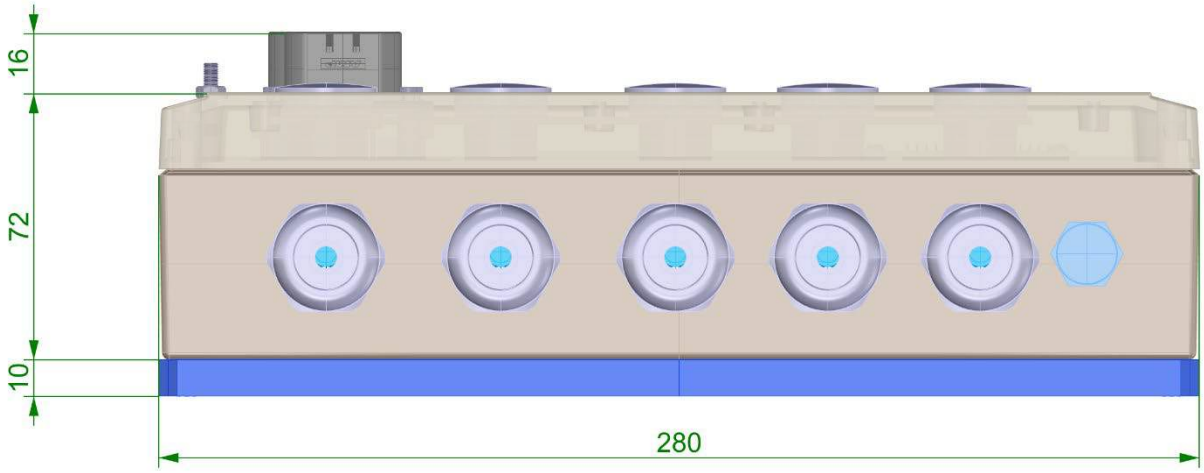

Weight 4.2 kg
Mouting scews: M4 x 40
Attention: maximum power loss 850 W

2.4 Dimensions - optional air cooling unit

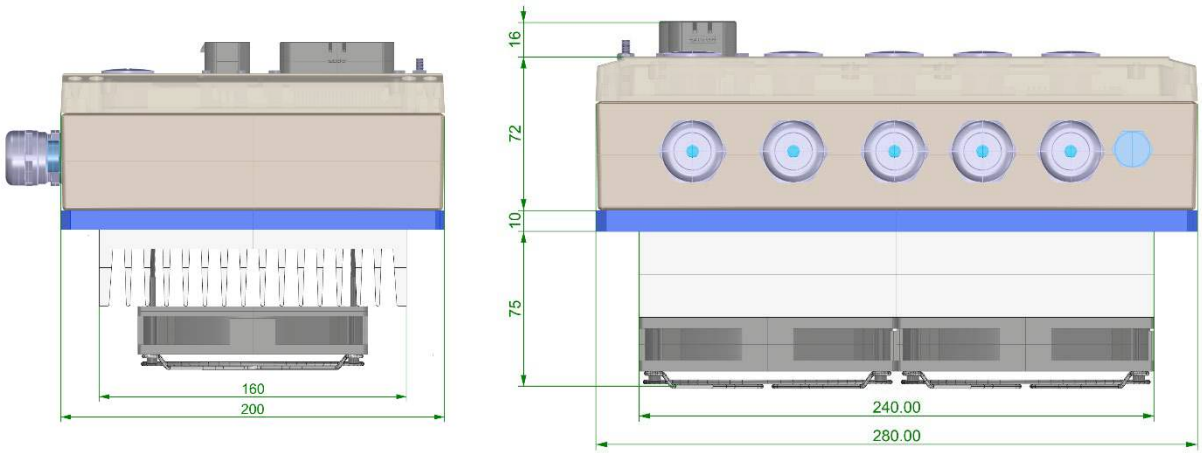

(Only possible on request, not available for individual units)

Weight: 5.8 kg
Mounting screws: M4 x 120, spacer tube 100 mm, bore 4.5 mm
Voltage for fan: 24 V DC
Cooling capacity 0.04 ° K/W

3 Electrical installation

3.1 Important advices

The order of the connections to the connector or terminal numbers is obligatory!

All further advice is non-obligatory. The input and output conductors may be altered or supplemented in accordance with the electrical standards and guidelines.

Adhere to:
- connection and operating instructions
- local regulations
- EU guideline 2996/42/EC
- guidelines for vehicles ECE-R100, ISO 6469, ISO 26262
- VDE and TÜV regulations and Trade body guidelines

Electrical installation should only be carried out when all voltages have been removed!
Ensure that the device is safely disconnected from the power supply
- place the short-circuit bracket
- affix warning signs

The installation should only be carried out by suitably trained personnel for electrical engineering.

Compare the connection data with those indicated on the type plate.
Ensure that the correct fuses have been provided for the power supply and the auxiliary voltage.
Power supply conductors and control lines must be routed separately from each other.
Connection shields and grounding must be carried out in compliance with the EMC guidelines.
Use the correct line cross-sections.

Note:
Insert external isolation monitors!

- Bad or insufficiently rated cable connections between the battery and the device may cause damage to the device! (Brake energy)

- Power supply cables between the BAMOCAR and the battery must be as short as possible. Long cables cause dynamic voltage drops due to the line impedance and as a consequence the service life of the installed capacitors would be reduced.

3.2 Circuit diagramm

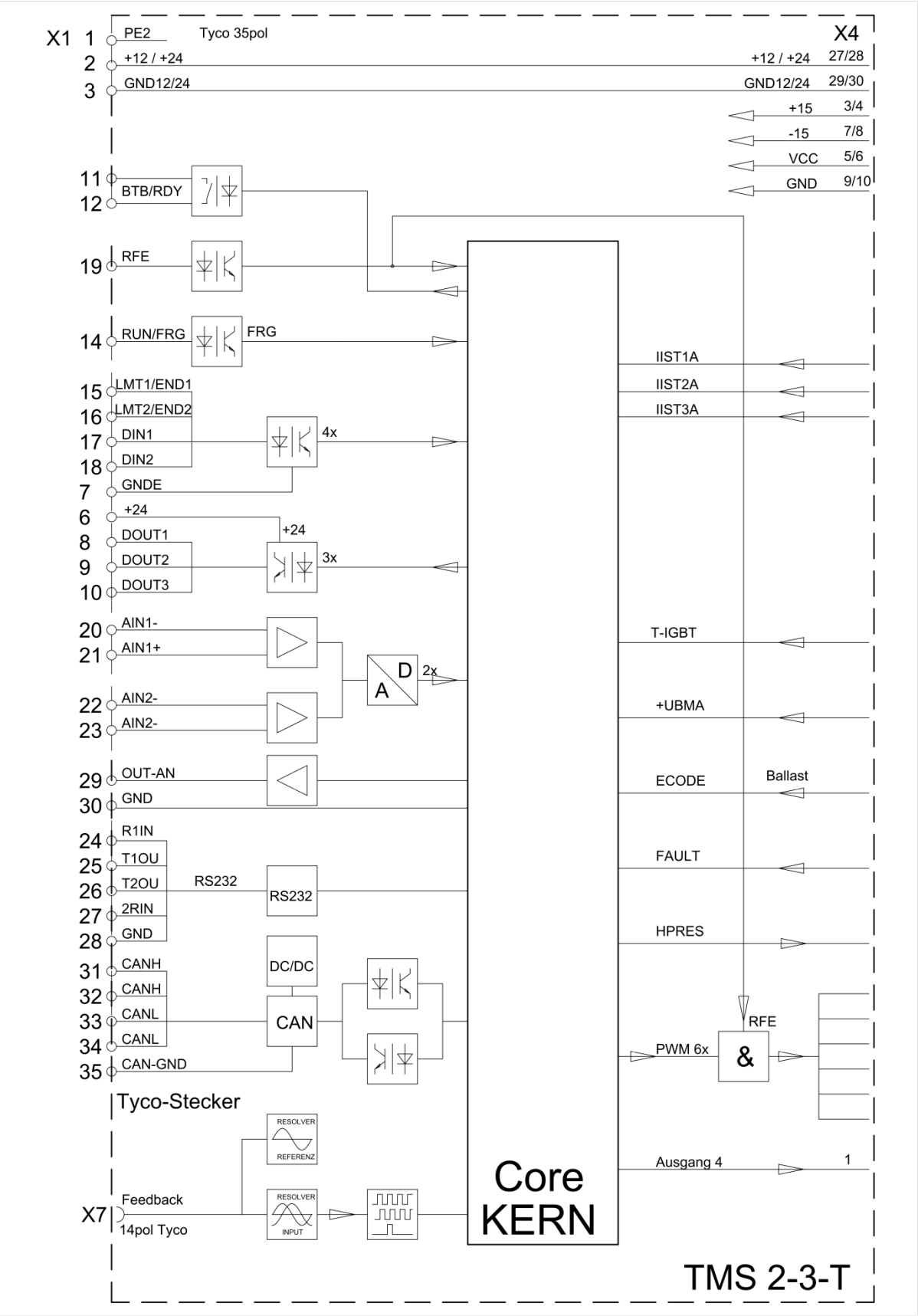

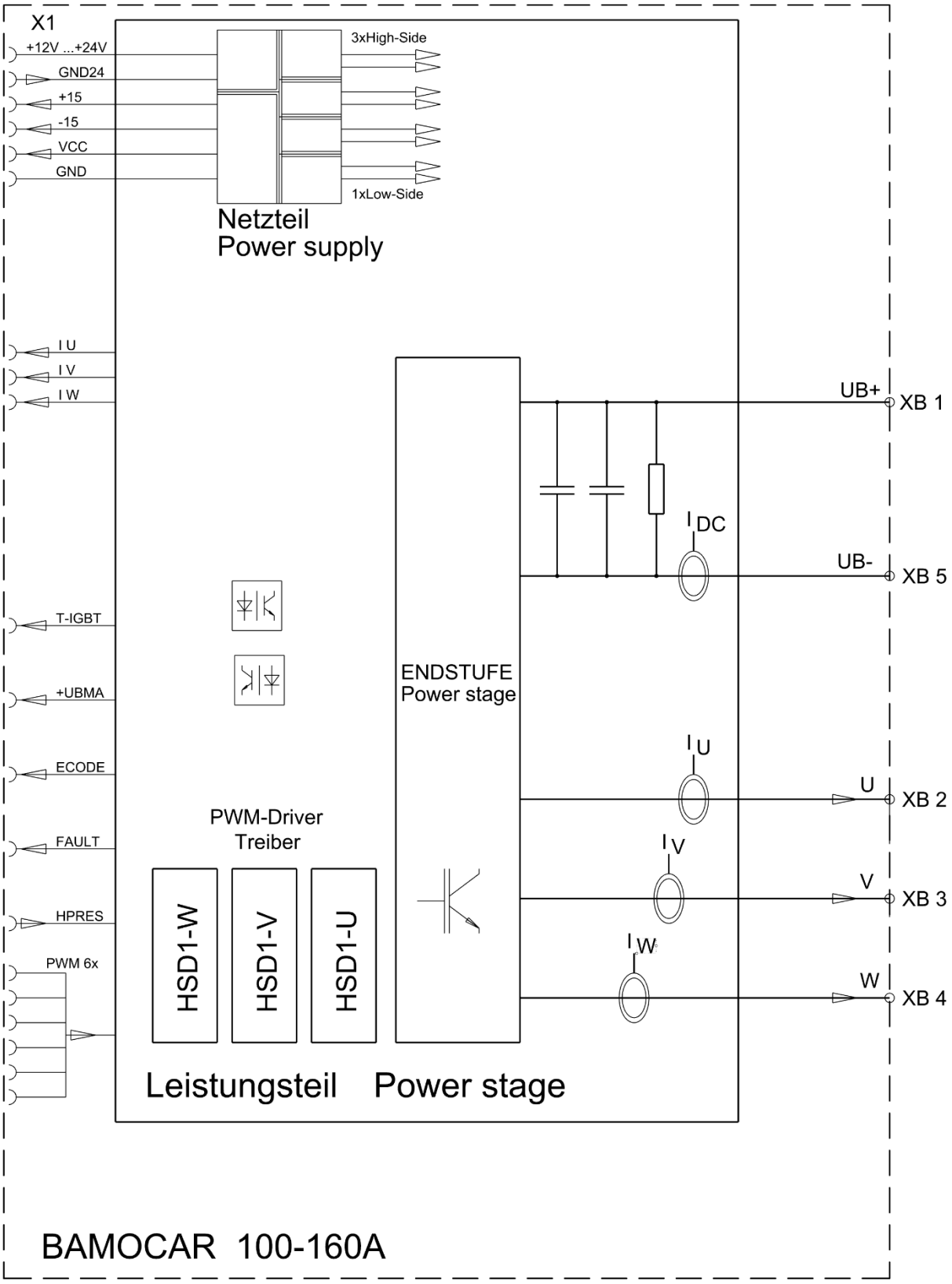
X1
+12V ...+24V
GND24
+15
-15
VCC
GND
3xHigh-Side
1xLow-Side
Netzteil
Power supply
I U
I V
I W
T-IGBT
+UBMA
ECODE
FAULT
HPRES
PWM 6x
PWM-Driver
Treiber
HSD1-W
HSD1-V
HSD1-U
ENDSTUFE
Power stage
I DC
UB+
XB 1
UB-
XB 5
I U
U
XB 2
I V
V
XB 3
I W
W
XB 4
Leistungsteil Power stage
BAMOCAR 100-160A

3.3 Connection diagramm

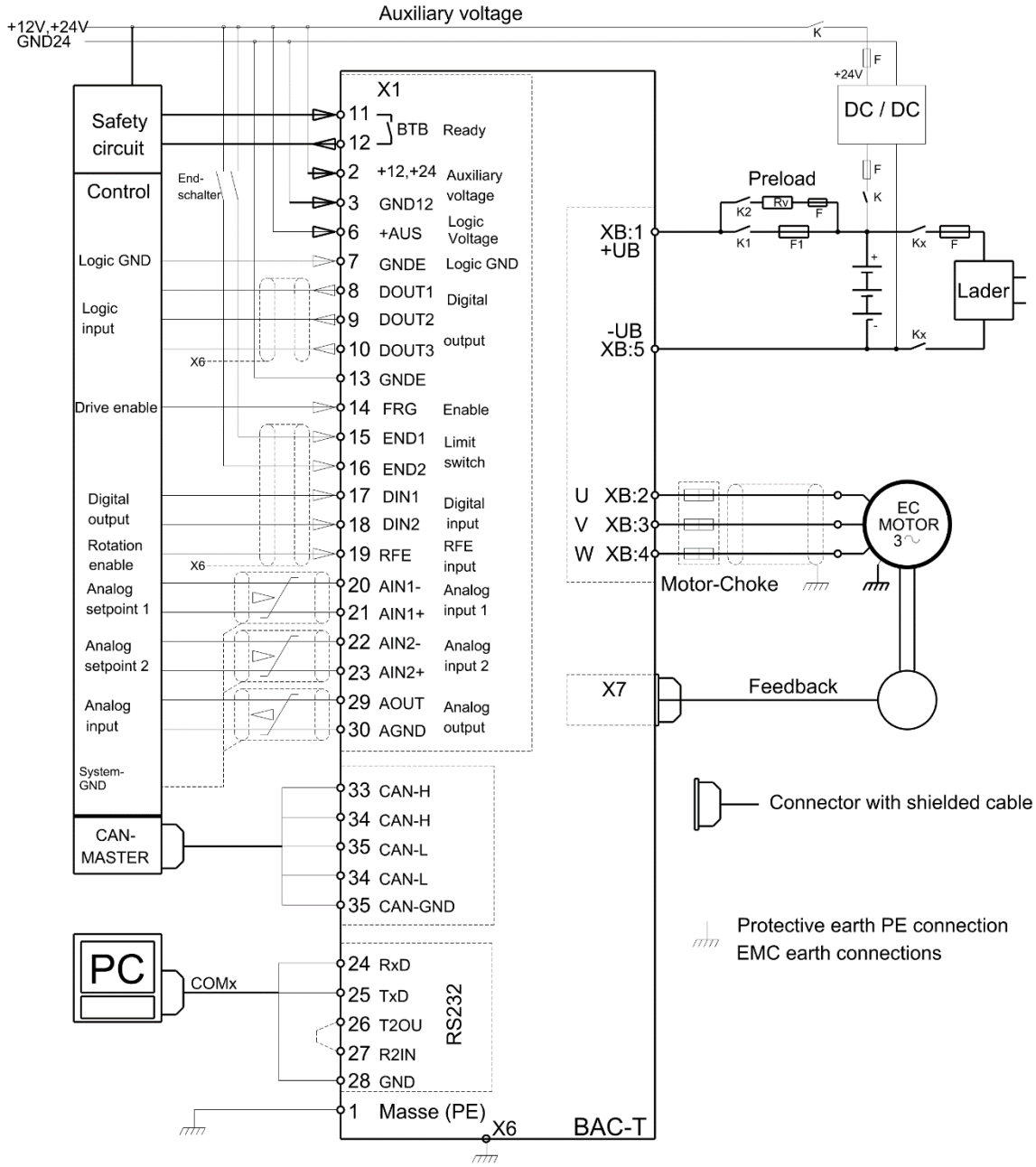

Note: 12 V variant only on request

3.4 EMV

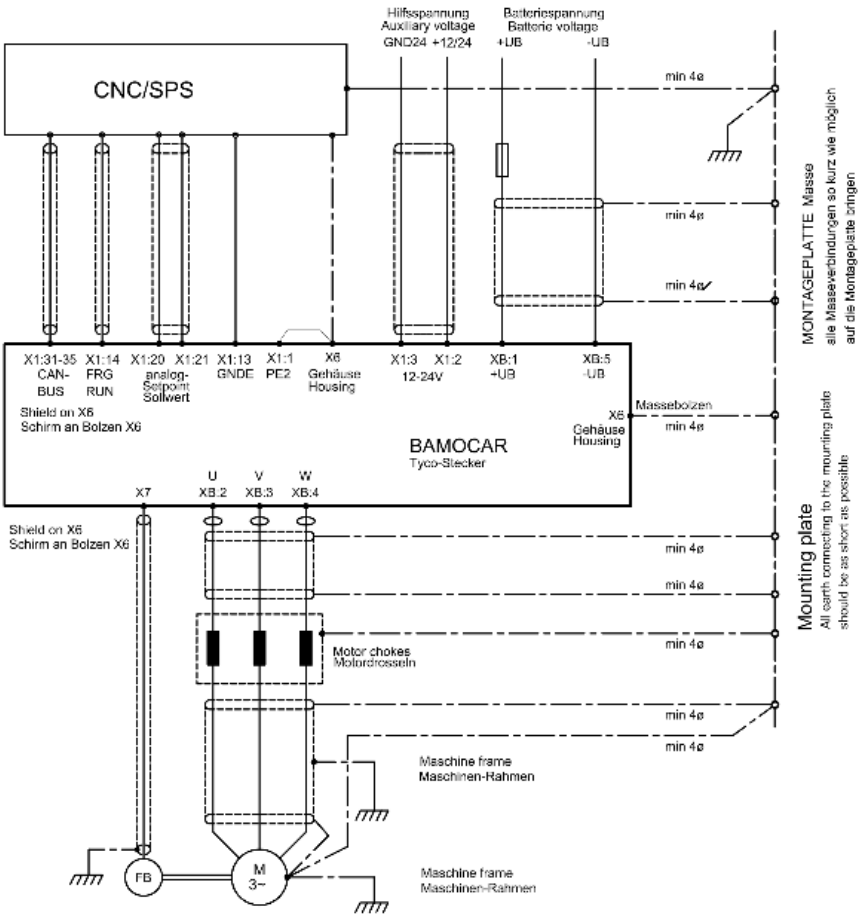

Note: 12 V variant only on request

The devices adhere to the EU guidelines 2004/108/EC and the technical standard EN 61800-3 provided that the following conditions are observed.

Mounting:
Unit is conductively mounted on a blank mounting plate 500 x 500 x 5 mm.
Mounting plate connected to earth via 10 mm².
Motor housing connected to earth via 10 mm².
Power shields connected to mounting plate.
X1:1 (PE2) connected to X6 via 1.5 mm².
X6 (housing ground) connected to mounting plate via 4 mm² cable.
Battery cables and motor cables shielded.

Control connections:
Signal lines shielded, analogue signal lines twisted and shielded.
Shield: short contact on ground bolt X6.

Battery connection:
12..700 V dc voltage

Motor connection:
Motor lines must be shielded, and must have surface-to-surface contact

After having been mounted in machines and installations, the operation of the device must not be started until the machine or the installation has been approved of the regulations of the EC machine guideline 2006/42/EC and the EMC guideline 2004/108/EC, for vehicles ECE-R83 and ECE-R100.

For vehicles ECE-R83, ECE-R100.

A manufacturer's declaration can be asked for.

Potential isolation

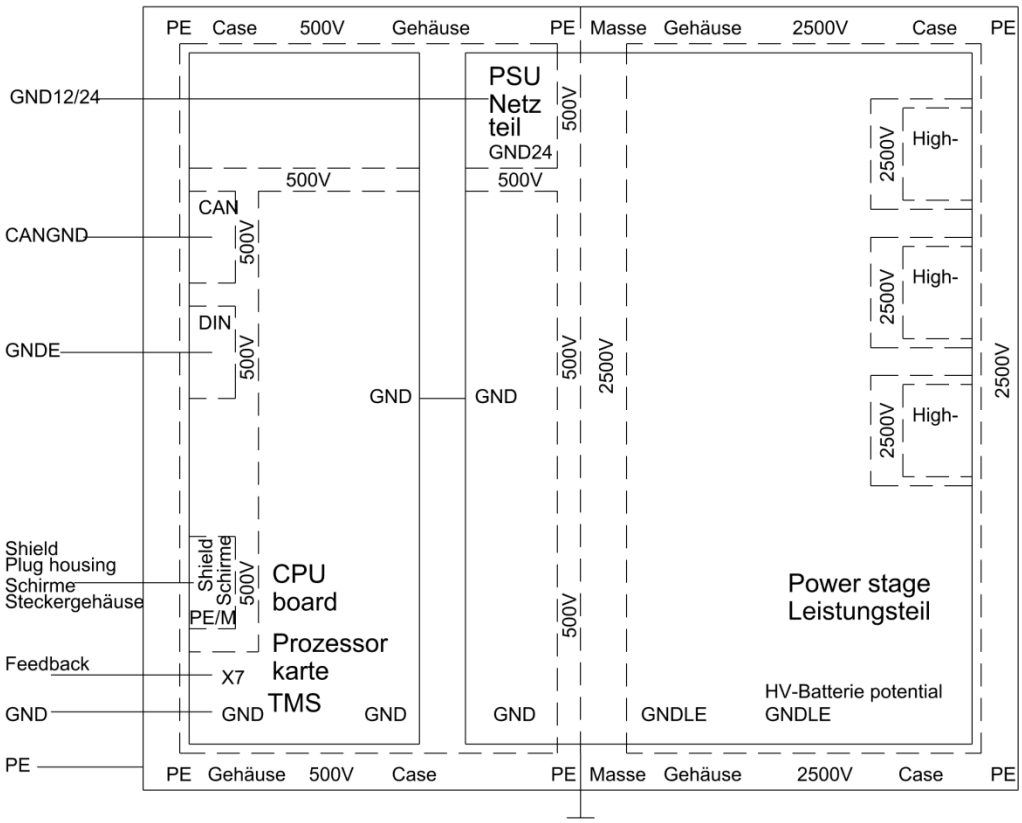

Note: 12 V variant only on request

3.5 Connectors

Connectors are not included in delivery

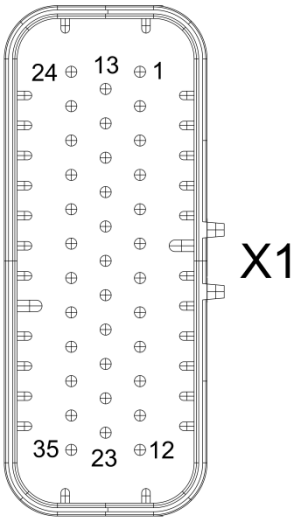

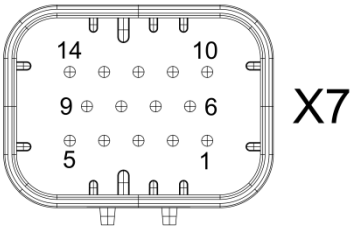

X6 earth connection bolt

35-pin connector: Tyco 776164-1 (X1)
14-pin connector: Tyco 776273-1 (X7)

Connector X1 Control inputs/outputs		
1	PE2	
2	+24 V	Auxiliary voltage +
3	GND24	Auxiliarx voltage 0
4	nc	
5	nc	
6	+ AUS	Supply outputs
7	GNDE	GNDE Outputs
8	DOUT1	Digital output 1
9	DOUT2	Digital output 2
10	DOUT3	Digital output 3
11	BTB	Ready for operation
12	BTB	Ready for operation
13	GNDE	GNDE Inputs
14	FRG	Enable
15	END1	Limit switch 1
16	END2	Limit swich 2
17	DIN1	Digital input 1
18	DIN2	Digital input 2
19	RFE	Rotor Enable
20	AR1	Analog Input 1-
21	AIN1	Analog Input 1+
22	AR2	Analog Input 2-
23	AIN2	Analog Input 2+
RS232		
24	RxD	RS232
25	TxD	RS232
26	V+ (RTS)	RS232
27	C/P (CTS)	RS232
28	GND	Analog GND
Analog Output		
29	DAC1	Analog Output
30	GND	Analog GND
CAN-BUS		
31, 32	CAN H	
33, 34	CAN L	
35	CAN-GND	

Connector X7 Encoder plug - RESOLVER	
1	
2	SIN1
3	COS2
4	REF1
5	
6	GND Temp.
7	
8	
9	
10	
11	Temp. signal
12	REF2
13	COS1
14	SIN2

Connector X7 Encoder plug - INC-TTL	
1	channel A
2	channel B
3	channel N
4	channel /A
5	GND
6	GND Temp.
7	
8	channel /N
9	+5 VCC
10	channel /B
11	Temp -Signal
12	Rotor position 1
13	Rotor position 2
14	Rotor position 3

Connector X7 Encoder plug - SINCOS	
1	ka+
2	kb+
3	kr+
4	ka-
5	GND
6	GND Temp.
7	kd+
8	kr--
9	+5 VCC
10	kb-
11	Temp. signal
12	kd-
13	kc+
14	kc-

3.6 Auxiliary voltage connection

Mains potential-free auxiliary dc voltage +12 V= (4A) to +24 V= (2 A) ±10 %
Note type plate!
The auxiliary voltage

- is galvanically connected with the logic voltage
- is galvanically isolated from all internal supply voltages of the device and from the housing
- internal regenerating fuse
- EMC filter

External fuse only for the line protection

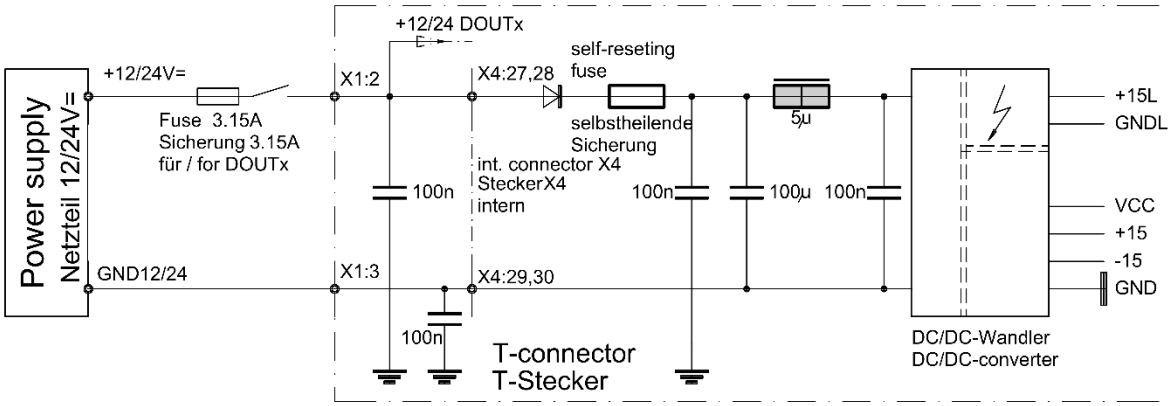

Note: 12 V variant only on request

Input voltage	24 V dc Note type plate	X1:2
	GND24	X1:3
Residual ripple	10 %	
Switch-on current	maximum 4 A	
Nominal current	at 24 V	0.9 A
	(at 12 V)	(1.4 A)

Neg. connection of the power supply to earth

Attention:

- In addition to the internal supply current (1.4 A at 12 V / 0.9 A at 24 V) the total current of the outputs (DOUT) must also be supplied by the power supply unit.
- **If the auxiliary voltage is less than 16 V, the error message Hardware Fault 1 (Power Fault) is displayed.**
- If the auxiliary voltage is less than 16 V, even short-term voltage dropouts, the internal power supply unit switches off.
  - Temporary data of the RAM are deleted.
  - The digital speed and the command troque values are set to zero.
  - **The LED signal for state „OK“ is dark.**
- Firmware download only when the power supply is switched off!
- The auxiliary voltage and/or power supply voltage must only be switched when the BAMOCAR is disabled.
  - No disable.
  - Enable input X1:14 = zero

3.7 Power connections

PG cable gland
metal M25 x 1.5 with shield contact

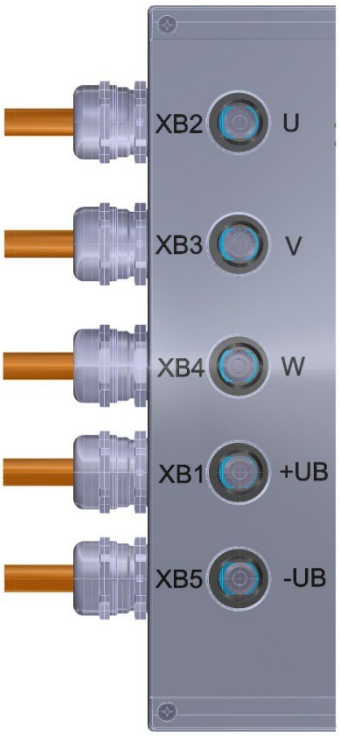

Connection - Motor U

Connection - Motor V

Connection - Motor W

Connection - Battery pos. pole
Connection- Battery neg. pole

Connecting cables max. 25 mm²

Assembly:

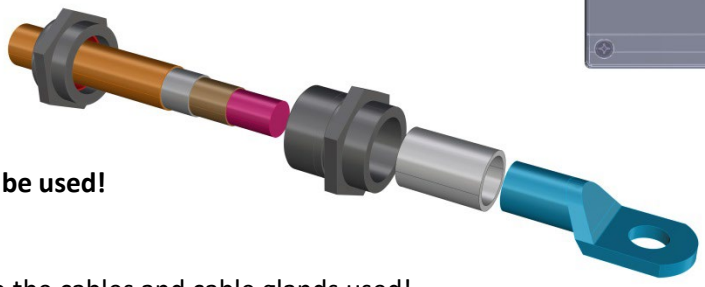

Only shielded cables to be used!

Connection example:
Adapt the dimensions to the cables and cable glands used!
Strip outer insulation to 34-38 mm, shorten shield to 10 mm,
Strip inner insulation, copper strand to 7-12 mm,
cable lug insulation 22 mm (braided sleeve
or heat-shrink tubing).
Cable lug for M6 screw.

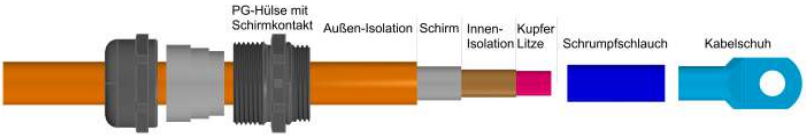

Slip complete PG gland including shield spring onto cable,
slip the cable lug insulation onto cable
crimp cable strands into the cable lugs (15 mm)

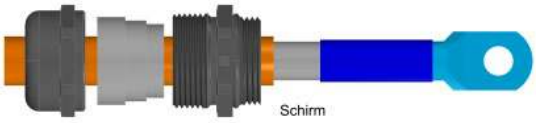

Screw the PG gland into the unit.

Connect the cable lug to the internal conductor rail and tighten the cap of the PG gland. Tighten the gland of the cable lug.

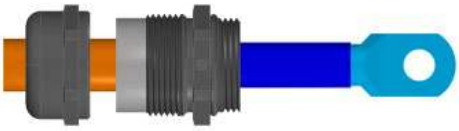

Connection screw: M6 x 8 (self-locking or corrugated washer, no toothed washer)
max. tightening torque 7 Nm

Note: The cable gland is not included in the delivery scope.

3.8 Battery connection

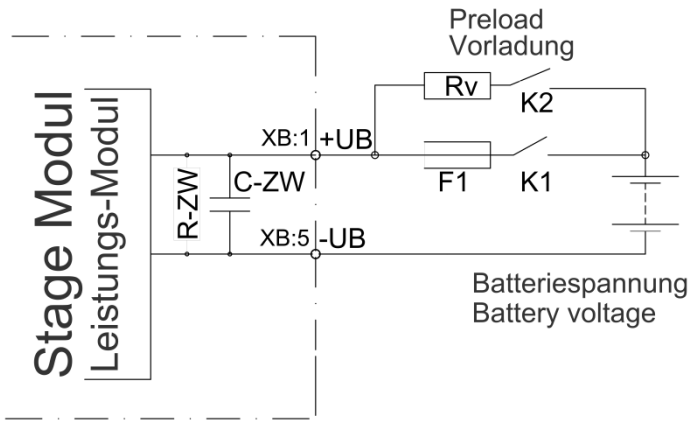

Bus circuit capacitor C-ZW:
75 µF at 700 V

Discharge resistance R-ZW:
50 kΩ
Series resistor:
RV approx. 40 Ω, 50 W

Charging current via K2:
< 20 A

Note:
Enable (RUN) only after the main contactor K1 is activated.

The max. supply voltage (battery voltage) 740 V=
must not be exceeded at any time (not even for short intervals)!
Danger of damage!
Error message: OVERVOLTAGE
F1 = safety fuse

Programming of an output for the pre-charging:
The output Dout1 switches the relay K3 when the bus circuit voltage (DC-BUS) is greater than the variable 1.

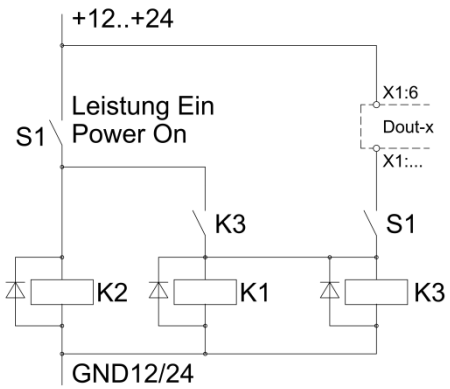

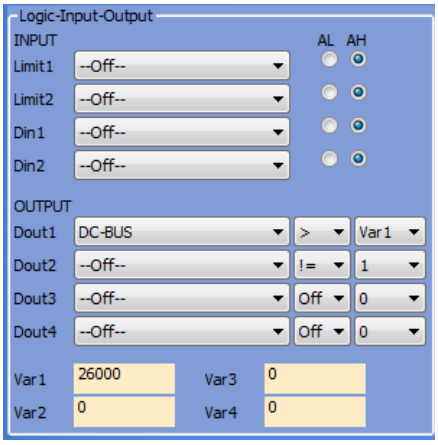

Note: 12 V variant only on request

Warning:
The power supply connection has no protection against reverse polarity.
If the polarity of the connection is wrong, the device will be destroyed!

Type	Battery connection	Connector cross-section		Fuse AT	Drive contactor size
	Pin	mm²	AWG		
100		6		160	
160		16		250	
Battery connecting line <2 m. For conductor lengths from 2 to 10m more powerful. **Lay plus-minus cable parallel** **Maximum connector cross-section 50 mm², cable lug for M10.**					

3.9 Motor power connection

For synchronous motors (brushless DC motors, EC motors) and AC servo motors with feedback givers.

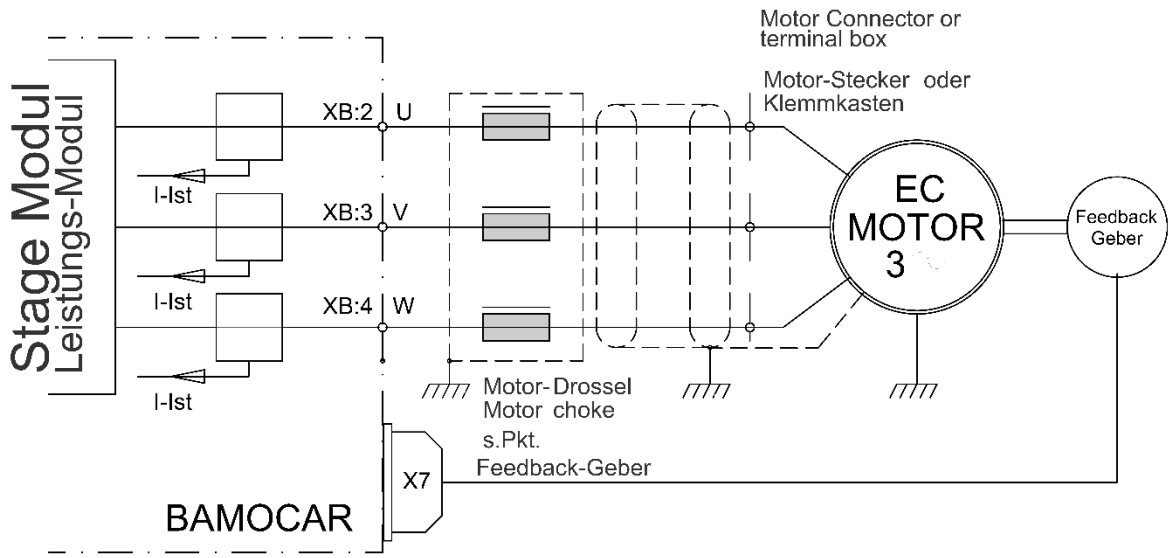

BAMOCAR 160 , BAMOCAR 900

Sequence of connection

Cable	M1	M2	M3	Motor cable 3 cores + protective conductor single-shielded, for 1000 V= shield capacity 150 pF/m min. cross-section see table
Motor phase	U	V	W	
Connecting bolt	XB:2	XB:3	XB:4	

Min. cable cross-section

Type BAMOCAR-D3-	100	160	Motor choke, only necessary for shield capacities superior to > 5 nF. motor cable approx. 25 m
Cross-section mm²	16	25	
AWG			

<u>Motor choke</u>
Only necessary for a shield capacity of > 5 nF. / approximately 25m motor cable.

<u>Magnetic rings:</u>
against HF failures of the sensor systems. Slide the rings onto the motor lines.

<u>Connection of the shield</u>
Surface-to-surface connection to the switch cabinet inlet.
Surface-to-surface connection as short as possible to the motor side.

For long motor cables, connect the motor cable shields to ground several times (mounting frame) (e.g. ground connection every 2 meters).

4 Control connections

4.1 Digital inputs

Input voltage		
Level ON		+10..+30 V
Level OFF		< +6 V
Input current	Max.	7.5 mA
Nominal voltage/current		+24 V/6 mA
Ground reference	GNDE	(X1:K)

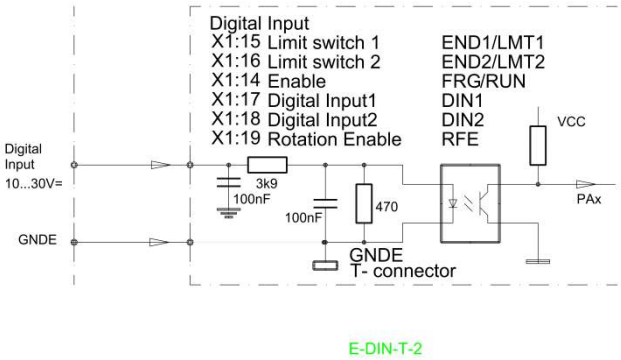

The enable input (FRG/RUN) and the input for the rotating field enable (RFE) are fixed, they cannot be programmed.
Without the enable FRG/RUN the servo-drive is electronically disabled (no PWM pulses).
Without the rotating field enable RFE the rotating field of the output stage is additionally disabled ö(2nd disable channel).
The drive is free of torque (no holding torque).

The other 4 digital inputs are freely programmable.
The inputs LMT1 (X1:15) and LMT2 (X1:16) are preferably to be used as inputs of the output stage Switch.

Input	Connector	Function	State	
RFE	X1:19	Rotor enable	fixed	
FRG/RUN	X1:14	Enable	fixed	
END1/LMT1	X1:15	Output stage switch 1	programmable	
END2/LMT2	X1:16	Output stage switch 2	programmable	
DIN1	X1:17	Digital input 1	programmable	
DIN2	X1:18	Digital input 2	programmable	

The enable (FRG X1:14) must not be initiated before the auxiliary voltage (12..24 V) and the power voltage have been switched on.

External power supply for the inputs and outputs

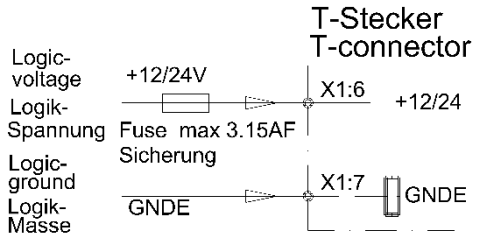

24 V for the logic voltage

GNDE logic ground

Note: 12 V variant only on request

4.2 Safety input RFE (Rotating field enable) Stopp class 0

When the input for the release or rotating field release is switched off the drive is torque-free. Without mechanical brake or lock the drive may fail or move

The motor cables are not voltage-free. Only the rotating field is blocked. When working on the motor or BAMOCAR, the battery motor controller be separated from the battery HV voltage.

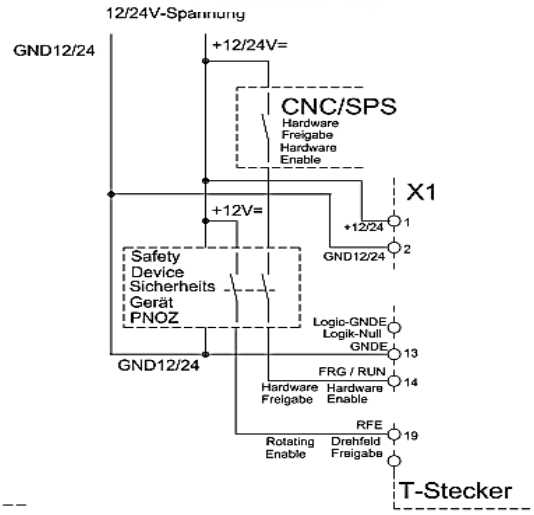

Operation with an RFE input
Two-channel disable of the enable via a safety switching device
Enable input FRG/RUN.
Rotary field enable input RFE.

Switching-on
Safety device contacts closed.
Release FRG/RUN 0.5 s after RFE.

Safety switch-off
Safety device contacts open.
No FRG/RUN signal blocks in the first Block channel the PWM pulses in the processor.
No RFE signal blocks the PWM pulses in a second blocking channel after the processor.

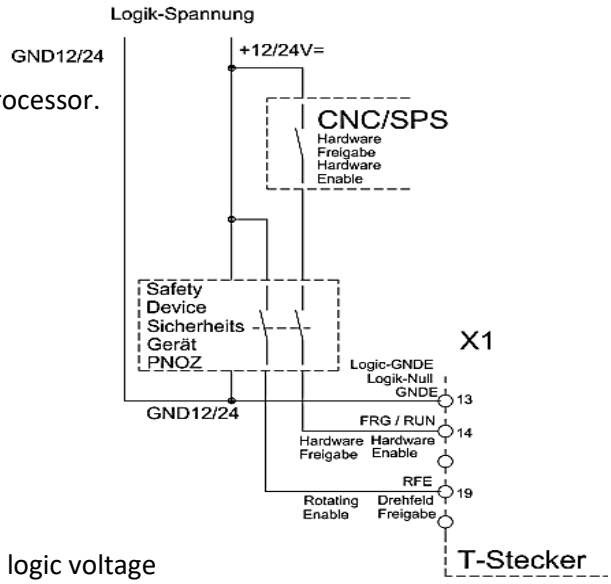

Restart
Unlock safety device.
Safety device contacts closed.
Only after renewed release FRG/RUN after the rotating field release RFE when the motor moves.

Operation without RFE input
The input RFE must be bridged with the logic voltage
If the logic voltage corresponds to the supply voltage, the RFE input is bridged with +24 V.
Enable FRG/RUN at least 0.5 s after the RFE signal.

Note: 12 V variant only on request

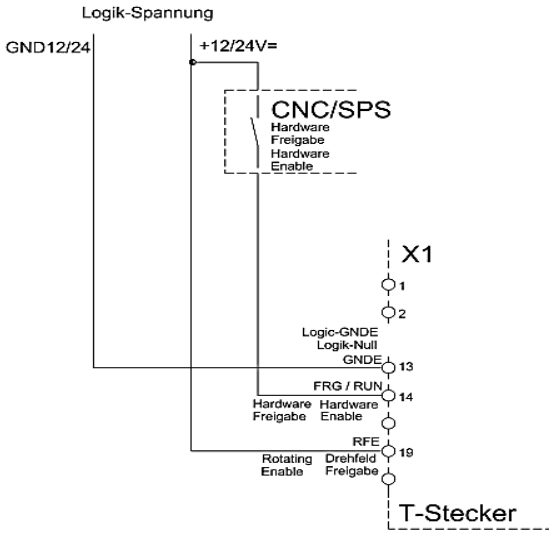

4.3 Digital outputs (open-emitter)

Output voltage		
Level ON	+12. .+24 V=	
Level OFF		< 1 V=
Output current	nom.	1 A
Output current	max.	2 A, 1s
Voltage reference	+24 V	(X1:6)
Ground reference	GNDE	(X1:7)

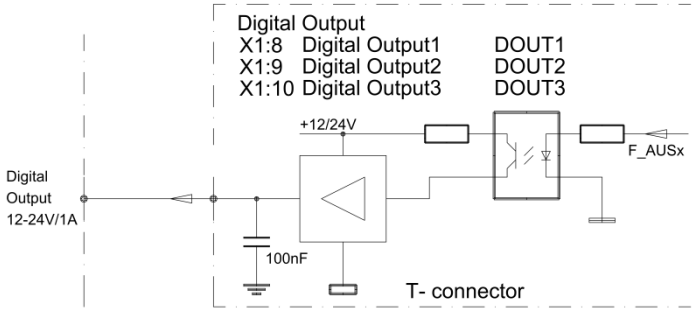

Note: 12 V variant only on request

Output	Connector	Function	State	Parameter
BTB/RDY	X1:11 X1:12	ready for operation	fixed Solid State Relais	
DOUT1	X1:8	Digital output 1	programmable	
DOUT2	X1:9	Digital output 2	programmable	
DOUT3	X1:10	Digital output 3	programmable	

Supply voltage for the logic outputs.

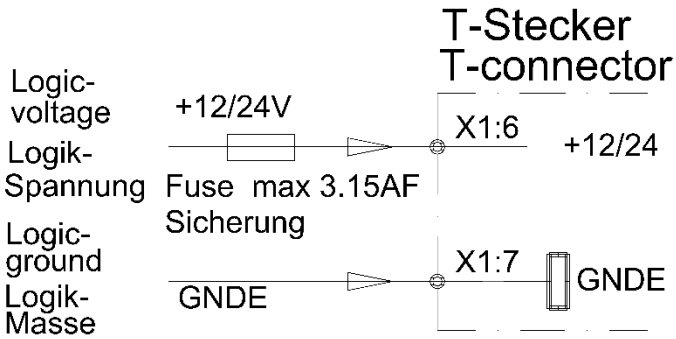

+12..+24V for the logic voltage
Note total current of all outputs

GNDE logic ground

Note: 12 V variant only on request

4.4 Signal contact Ready (Solid State Relay) / Ready BTB / RDY

Hardware: Safety circuit with solid state relay contact.

Software: State signal parameter state RDY (0x40 Bit 14)
Ready BTB = logic 1

In case of errors this safety circuit is separated by the relay and the state RDY is set to 0.
Further control units (e.g. BMS, VCU, etc.) may respond.

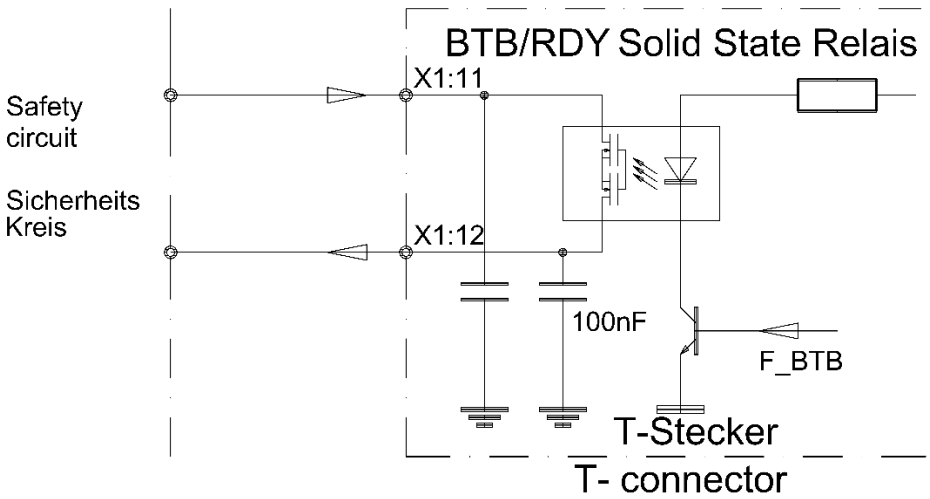

Contact for max. 48 V / 0.5 A (not short-circuit proof)
Capacitive load: max. 1 µF
Contact resistance: max. 2 Ω

Ready for BTB
The BTB relay contact is closed.

Not ready
BTB relay contact is open.
Red LED and error messages with Status 7-segment-LED.

BTB/RDY always insert contact into the safety circuit!
Secure BTB/RDY signal path with 0.5 AF!

BTB function with undervoltage monitoring:

BTB signal even if power voltage is missing.
Programming in NDrive: Parameter BTB Power = without (0x5ABit 5 = 1).

No BTB message if power voltage is missing.
Programming in NDrive: Parameter BTB.Power = with (0x5ABit 5 = 0).

(see Manual NDrive-x)

4.5 Analogue inputs ± 10 V

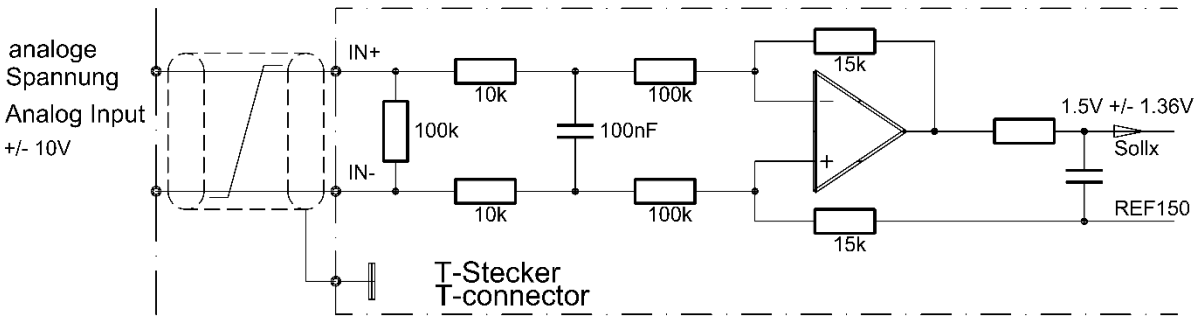

Input	Connector	Basic function	Voltage	State	Parameter
AIN1+, AIN1-	X1:21, X1:20	Speed command value	±10 V	prog.	
AIN2+, AIN2-	X1:23, X1:22	Current limit 2. speed reference value	±10 V	prog.	

Features

Differential input	AIN1+ / AIN1-	AIN2+ / AIN2-	
Input resistance	70 kΩ		
Threshold voltage	±12 V		
Resolution	11 Bit + sign		

The direction of rotation of the motor can either be changed by swapping the +/- connections at the differential input, or by means of a logic input or by programming (see NDrive-x).

The analog inputs can be assigned to different functions (see NDrive-x).

The analog input AIN1 can be used for digital setpoint (RS232, x-BUS)
- can be programmed as an external analog speed limit,

and the analog input AIN2 can be
- can be programmed as external analog current limit.

4.6 Analogue output ±10 V

Output	Connector	Function	Voltage	State	Parameter
DAC1	X1:29	Measured value	±10 V	prog.	
GND	X1:30	Signal zero	0 V	fixed	

The analog output can be assigned to different functions.

4.7 Serial interface RS 232

The device is programmed and operated during commissioning via the serial pc interface RS232. There is a software description in the Manual NDrive.

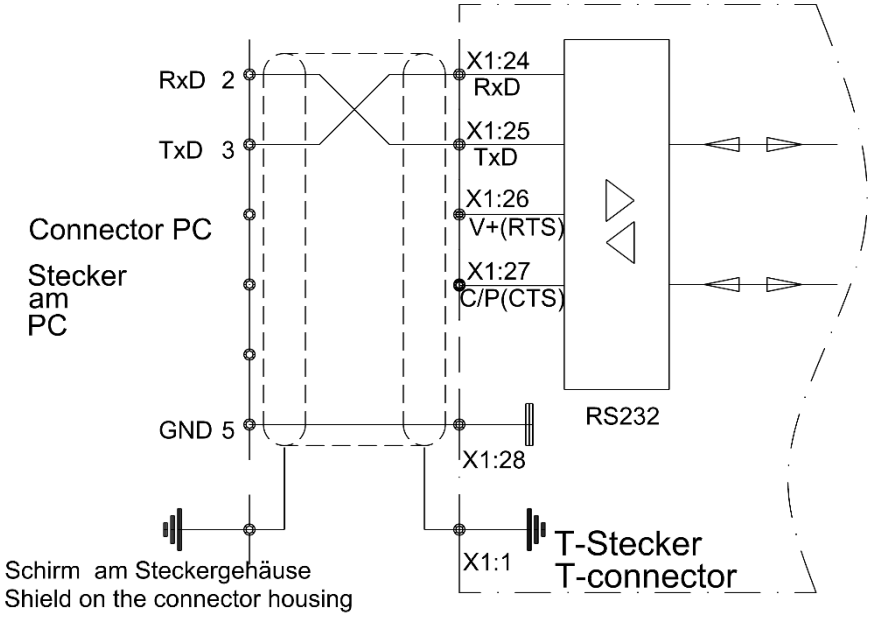

Attention:
The serial interface is electrically connected to the device zero (GND/AGND).

The BAMOCAR-D3-700-100/160 and the serial interface (COMx) of the pc must only be connected using a shielded cable.

Install the cable only after disconnecting the device from the mains.
The interface is adjusted to 115200 Baud.
It can also be adjusted to 9600 Baud by means of the NDrive.

Connecting cable
LiYCY 5x0.25 + shield

View to the soldered side
Shield on the housing
Max. cable length 10 m

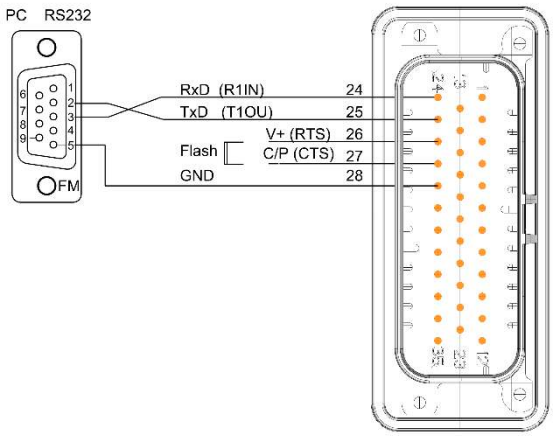

In case of strong interferences across the interface a line filter should be installed.
Notebooks with a USB RS232 converter are usually more susceptible to interferences.

For firmware updates:
plug-in a short-circuit bridge between X1:26 and X1:27, then switch-on the auxiliary voltage.
Start the flash program.

4.8 CAN-BUS

The CAN-BUS is a digital connection to the CNC control.
Optimum conditions are achieved with CNC controls and CAN components of LABOD electronic or CAN Open.
Programming and operation by means of the control panel via the CAN-BUS.
Interface complies with the standard ISO 11898.
Adjustment and programming see Manual NDrive and CAN Manual.

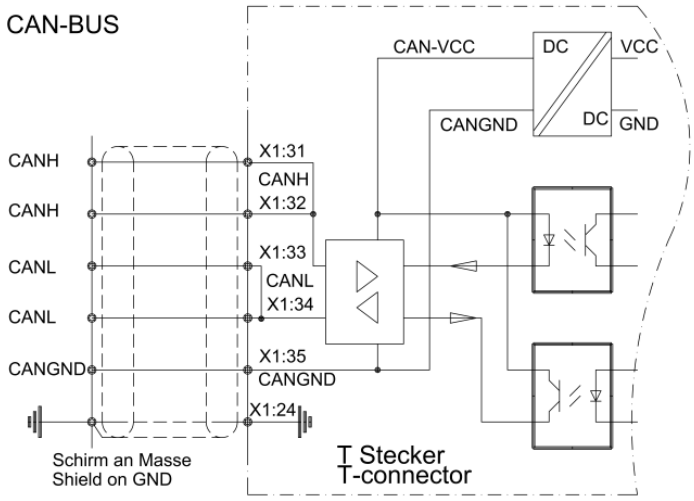

CAN-BUS-Kabel
Use a shielded bus conductor with a low shielding capacity.
LiYCY 3 x 0.25 + shield
.

Designation	Connector	Cable colour	Cable no.
CAN-H	X1:31,32	green	3
CAN-L	X1:33,34	yellow	2
CAN-GND	X1:35	white	1
Shield	X1:1		

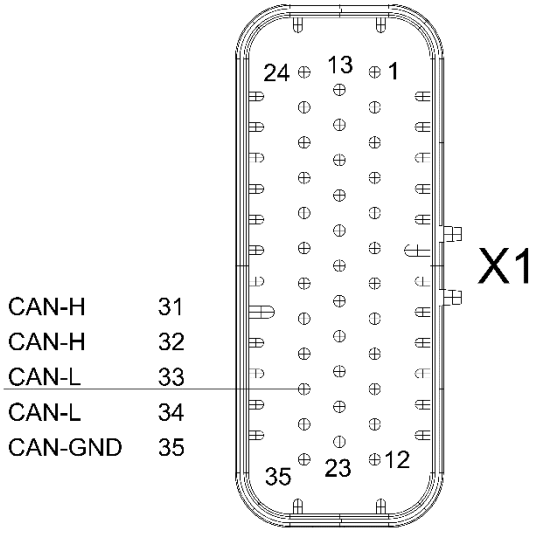

CAN BUS Connection with multipleBAMOCAR-D3-700-160

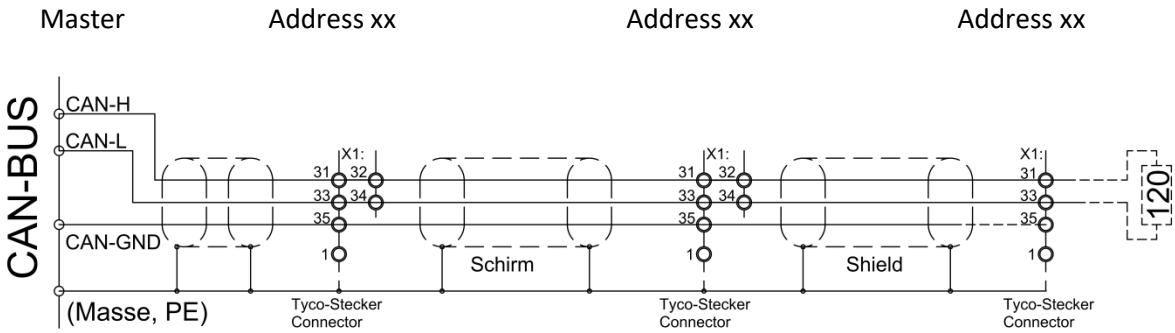

Terminating resistor at the end of the bus line > 120 Ω between CAN-H and CAN-L

4.9 Resolver connection

Only with BAMOCA-PG-D3-RS

The resolver is an absolute measuring system for one motor revolution.

It is robust and insensitive to high motor temerpatures.

The design corresponds to rotation transformer.

The rotor is supplied by the reference (10 kHz).

The stator supplies the sine and cosine signals modulated by the rotation frequency.

In the servo amplifier the amplitudes of these signals are evaluated and digitized.
The resolution is automatically set to 10, 12 or 14 bits.

The maximum possible speed is 50 000 rpm (10 bit).

The digitized signals are used for the polar wheel angle, position control, speed control and incremental output.

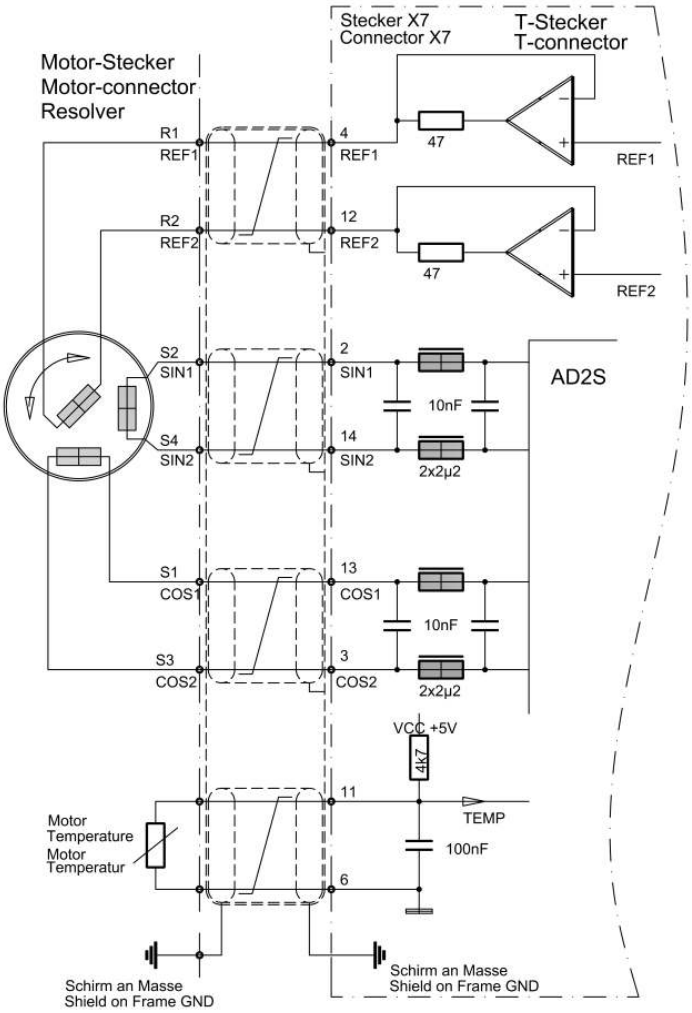

Only use motors with a 2-, 4-, 6-, or 8-pole resolver which have been approved by the manufacturer.		
Connector	X7	14-pin Tyco type connector
Connecting cable	4 x 2 cores, twisted in pairs and shielded, additional overall shield. For link chains use appropriate cables!	
	Min. cross-section 0.25 mm	
Cable length	for >25 m only use high-quality resolver cables with adequate shielding properties.	
Shield connection	across connector X7	combine all shields and connect them to the housing
	across the motor connector	connect the overall shield to the connector housing
Setting parameters	see software Manual NDrive	

4.10 Encoder connection TTL

Only with BAMOCAR-PG-D3-IN

TTL incremental encoder (Encoder) with 2 counting tracks and one zero track plus 3 rotor position tracks. Counting tracks with or without push-pull output.

With simple connection A, B, N the negated inputs.

Counter input corresponds to RS485. Maximum counting frequency 500 kHz.

The incremental encoder is galvanically is connected to the device zero (GND).

The 5 V supply voltage is provided by the servo.

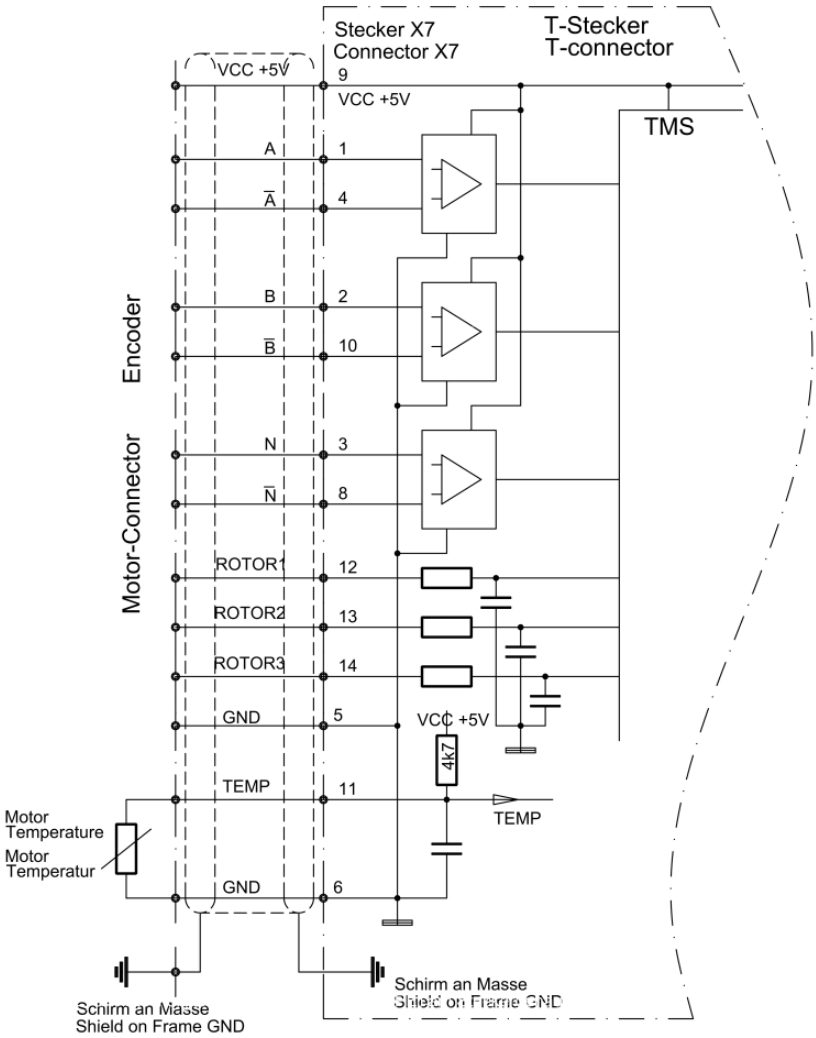

Only use motors with TTL incremental encoders and rotor position tracks which have been approved by the manufacturer.		
Connector	X7	14-pin Tyco type connector
Connecting cable	10 shielded signal conductors	min. cross-section 0.14mm
	2 supply lines, 2 temperature core	min. cross-section 0.5mm
	For link chains use appropriate cables!	
Cable length	for >25 m the cross-section of the cable used must be increased	
Shield connection	across connector X7	connect the shield to the connector housing
	across the motor connector	connect the shield to the connector housing
Setting parameters	see software Manual NDrive	

Adapter for INC encoder with A, B, N channel without push-pull signals

The device input for the incremental counter signals requires the push-pull counter pulses for a reliable detection.
Encoders without push-pull signals (e.g. position encoders) with different supply voltages are used for many simple applications. For these applications the INC adapter must be installed.
The adapter converts the counter signals A, B, N to the push-pull signals A, /A, B, /B, N, /N.

For supply voltages which differ from 5V the voltage must be specified on order and externally be connected.

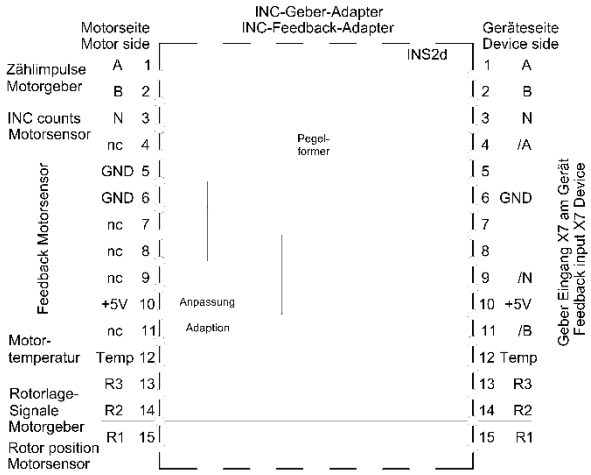

Checking the correct connection
Rotor sequence

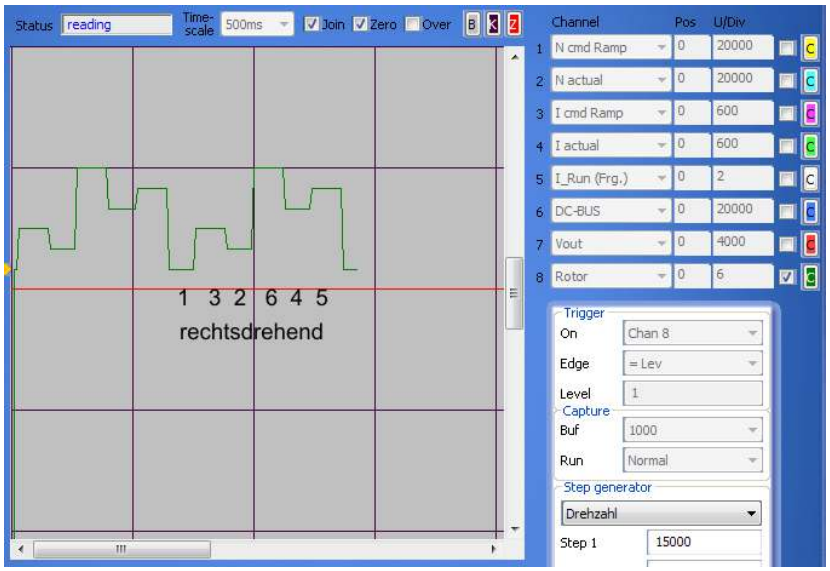

The correct sequence of the rotor signals with a motor turning clockwise is 1, 3, 2, 6, 4, 5.

If the sequence of numbers is different the encoder connection of the rotor position signals Rotor1, Rotor2, Rotor3 (U, V, W) is not correct.

Use the connection diagram!

Numerical value
Turn motor clockwise for one revolution without enable.

One motor revolution corresponds to a position value of Num 65536.
In case of different results the input of Feedback Inc-Mot (0xa6) is incorrect.

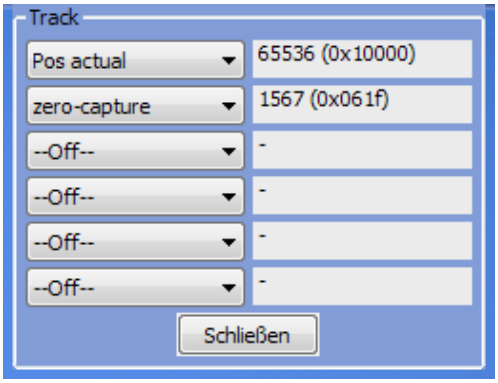

Zero angle
Motor turning clockwise and anti-clockwise at 10 %.. 100 % speed.
The value of zero-capture must remain constant.

4.11 SIN COS 1V_{SS} Connection

Only with BAMOCAR-PG-D3-SC

Incremental encoder (Encoder) with 2 analog sinusoidal counting tracks and a zero track plus 2 commutation tracks. Differential signals 1 VSS.

Maximum counting frequency 500 kHz.

The incremental encoder is galvanically with the device zero (GND) connected.
The 5 V supply voltage is supplied by the Servo.

The resolution is automatically set to optimum.

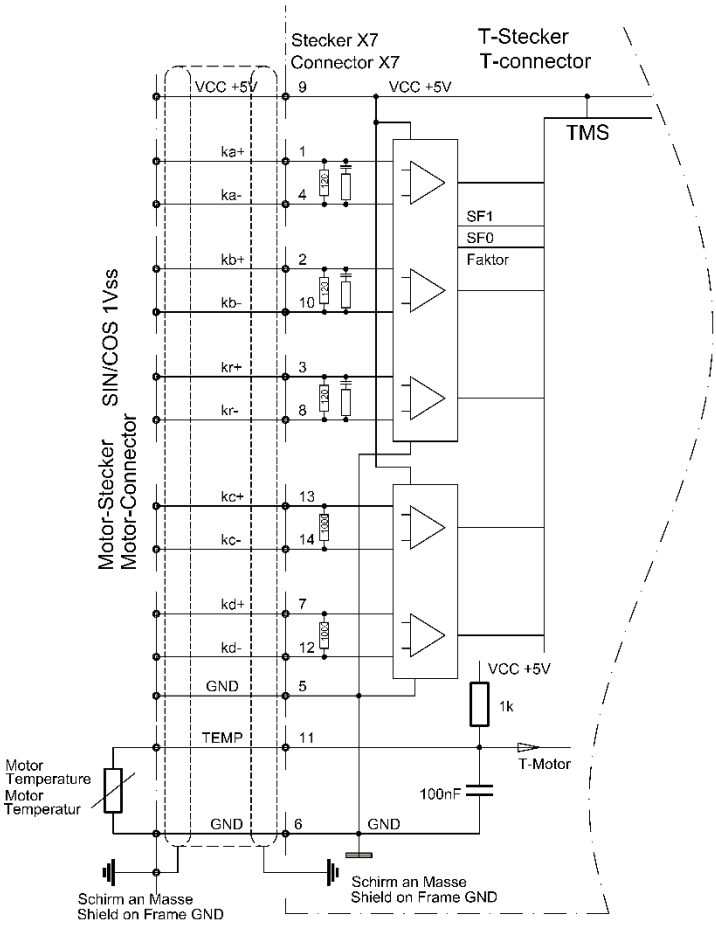

Only use motors with SIN/COS encoders (SC) which have been approved by the manufacturer.		
Connector	X7	14-pin Tyco type connector
Connecting cable	4 x 2 signal conductors, twisted and shielded	min. cross-section 0.14 mm
	2 x 2 signal conductors, twisted and shielded	min. cross-section 0.14 mm
	4 x supply lines, 2 x temperature cores	min. cross-section 0.5 mm
Cable type	(4 x (2 x 0.14) +(4 x 0.14) C + 4 x 0.5) C For link chains use appropriate cables!	
Cable length	for >25 m the cross-section of the cable used must be increased by one grade	
Shield connection	across connector X7	connect the shield to the connector housing
	across the motor connector	connect the shield to the connector housing
Setting parameters	see software Manual NDrive	

4.12 Rotor position sensor connection with BL tacho

Only with BAMOCAR-PG- D3-BL

3 rotor position encoder signals (Hall sensors) for commutation.

With or without brushless tachogenerator.

The rotor position sensor is galvanically connected to device zero (GND).

Supply voltage 15 V from servo.

Adaptation adapter if the tachometer voltage at nominal speed is greater than 10 V~.

For lower tacho voltages
X7: Connect pins 1, 9 and 11.

Connect speedometer center to X7:1.

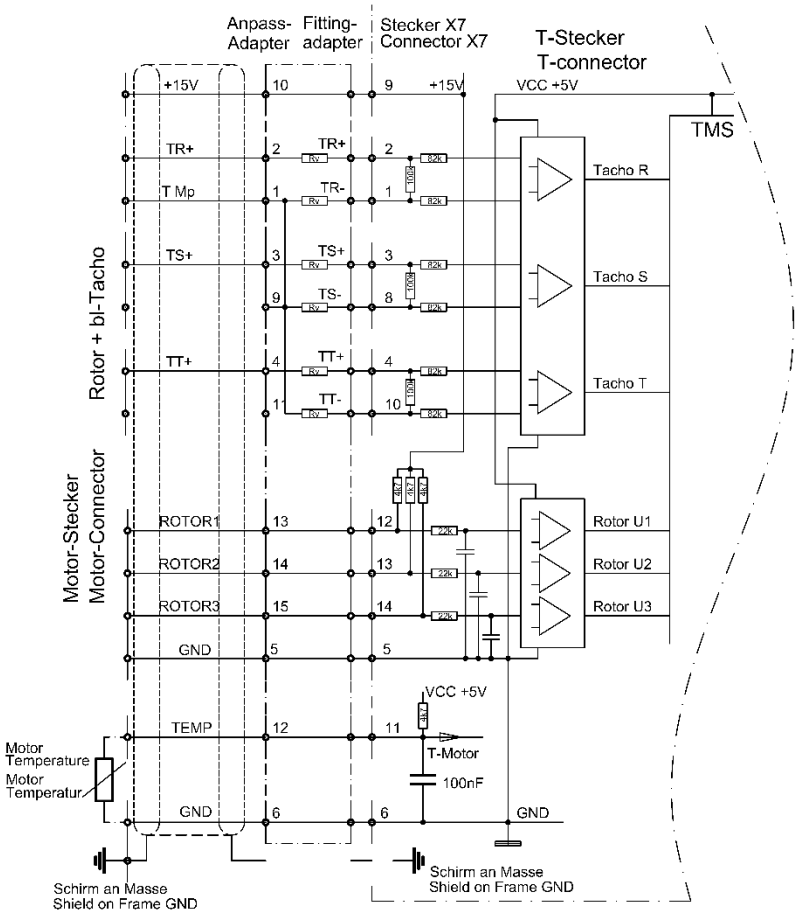

Only use motors with rotor position encoders (bl) which have been approved by the manufacturer.		
Connector	X7	14-pin Tyco type connector
Connecting cable	12 x signal conductors, supply lines, 2 x temperature cores	min. cross-section 0.25 mm
	For link chains use appropriate cables!	
Cable length	for >25 m the cross-section of the cable used must be increased by one grade	
Shield connection	across connector X7	connect the shield to the connector housing
	across the motor connector	connect the shield to the connector housing
Setting parameters	see software Manual NDrive	

5 State display

The state **"normal"** is signaled by a bright green seven-segment display + decimal point (display of the state).

The state **"fault"** is signaled by a bright red fault LED and the seven-segment display indicates the error no.

The state **"warning"** is signaled by the flashing red fault LED and the seven-segment display indicates alternately the state and the warning no.

5.1 Display of the BAMOCAR states

Display	Point/segment	State	State of NDrive
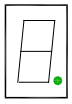	flashing dark	Processor active Auxiliary voltage missing or inherent hardware failure	
	flashing bright dark	Starting state after reset (auxil. voltage 24V off-on). The first enable stops the flashing display. Drive enable Drive disabled (not enabled)	OK = 0 OK = 1, ENA = 1 OK = 1, ENA = 0
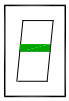	bright	Speed zero (standstill signal)	N0 = 1
	bright	Drive revolves clockwise, N currently positive	N0 = 0
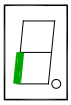	bright	Drive revolves anti-clockwise, N currently negative	N0 = 0
	flashing bright dark	Motor current reduced to continuous current **Icns** Motor current at max. current limit **Imax** Normal operation; Motor current within the current limits	Icns = 1 Icns = 0 Icns = 0
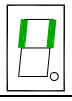	bright for 0.1 s	A new command (value) was received from the BUS or RS232.	

Example: Motor revolving clockwise

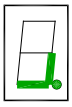

Point flashes	=	active processor
Bottom segment	=	drive enabled
Right segment	=	motor revolves clockwise

5.2 State information - error

The red LED "fault" is bright and the fault no. is indicated by the green seven-segment display.

Display Servo:	Error NDrive:	Description:	Address: RegID 0x8F
	NOREPLY-No RS	RS232 interface not plugged or disturbed	
0	BADPARAS	Damaged parameter	Bit 0
1	POWERFAULT	Hardware error	Bit 1
2	RFE	Safety circuit faulty (only active with RUN)	Bit 2
3	BUS TIMEOUT	CAN TimeOut time exceeded	Bit 3
4	FEEDBACK	Encoder signal faulty or missing	Bit 4
5	POWERVOLTAGE	Power voltage missing	Bit 5
6	MOTORTEMP	Motor temperature too high	Bit 6
7	DEVICETEMP	Device temperature too high	Bit 7
8	OVERVOLTAGE	Overvoltage > 1.8 x U_N reached	Bit 8
9	I_PEAK	Overcurrent or strongly oscillating current detected	Bit 9
A	RACEAWAY	Drive races (without command value, wrong direction)	Bit 10
B	USER	User - choice of error	Bit 11
C			Bit 12
D	Reserve		Bit 13
E	HW_ERR	Current - measurement error	Bit 14
F	BALLAST	Ballast circuit overloaded	Bit 15

Note:

- Error F is a device-dependent error (for BAMOBIL and BAMOCAR without function)

- If the auxiliary voltage is applied when the enable is closed (FRG/RUN X1:7 active), the red LED indicates an error. The error is not signalled via the 7-segment display.

- Error 1 (POWEWRFAULT) is an overall error message of the hardware monitoring:
  („I_FAULT“ permanently set)
  - Overvoltage across the bus circuit
  - Driver card voltage monitoring (15 V, 5 V)
  - Undervoltage monitoring of the auxiliary voltage (< 10 V)
  - Overtemperature in at least one IGBT module

  („I_FAULT” not permanently set)
  - Dangerous overcurrent (causes may be currents which are too high or oscillating currents, bad controller adjustments, or hardware defects (e.g. IGBT module))

Note: Fault 5

	**Fault**	**Light display:** • FAULT LED rot - **lighting** • Error No. 5 is displayed	POWERVOLTAGE (missing power voltage)

When applying the auxiliary voltage with closed enable (FRG/RUN X1:7 active) the red LED indicates a fault. There is no error indication in the 7-segment display.

5.3 State information - warning signals

The state **"warning"** is signalled by the flashing red fault LED and the green seven-segment display indicates alternately the state and the warning no.

Display Servo:	**Error NDrive:**	**Description:**	**Address:** RegID 0x8F
0	WARNING_0	No device identification	Bit 16
1	ILLEGAL STATUS	RUN signal disturbed, EMI	Bit 17
2	SAFE_IN	RFE input inactive (active without RUN input)	Bit 18
3			Bit 19
4			Bit 20
5			Bit 21
6	MOTORTEMP	Motor temperature > (I-red-TM or 93 % from M-Temp)	Bit 22
7	DEVICETEMP	Device temperature > 87 % of limit	Bit 23
8	Vout_Sat	Limit of the existing voltage output is reached	Bit 24
9	I_PEAK	Overcurrent 200 %	Bit 25
A	RACEWAY	Resolution range of the speed measurement exceeded	Bit 26
B			Bit 27
C			Bit 28
D			Bit 29
E			Bit 30
F	BALLAST	Ballast circuit > 87 % overloaded	Bit 31

Note:

- Warning F is a device-dependent warning (for BAMOBIL and BAMOCAR without function)

Example: Warning no. 7

7.	**Fault**	**Light display:** • FAULT LED red - **flashing** • The display swaps between the state and the warning no.7	DEVICETEMP Motor temperature ➢ (I-red-TM or 93 % of M-Temp)

6 Measured values

6.1 DC link DC BUS voltage, battery voltage (700 V)

BAMOCAR	DC circuit voltage	Parameter 0xEB	DC-BUS %
Maximum voltage	800 V	25200	154
Overvoltage switch off	780 V	24570	150
Without power voltage	0 V	0	
Standaridzation	1 V	31,50	0,194
Tolerance: +/-2 %			

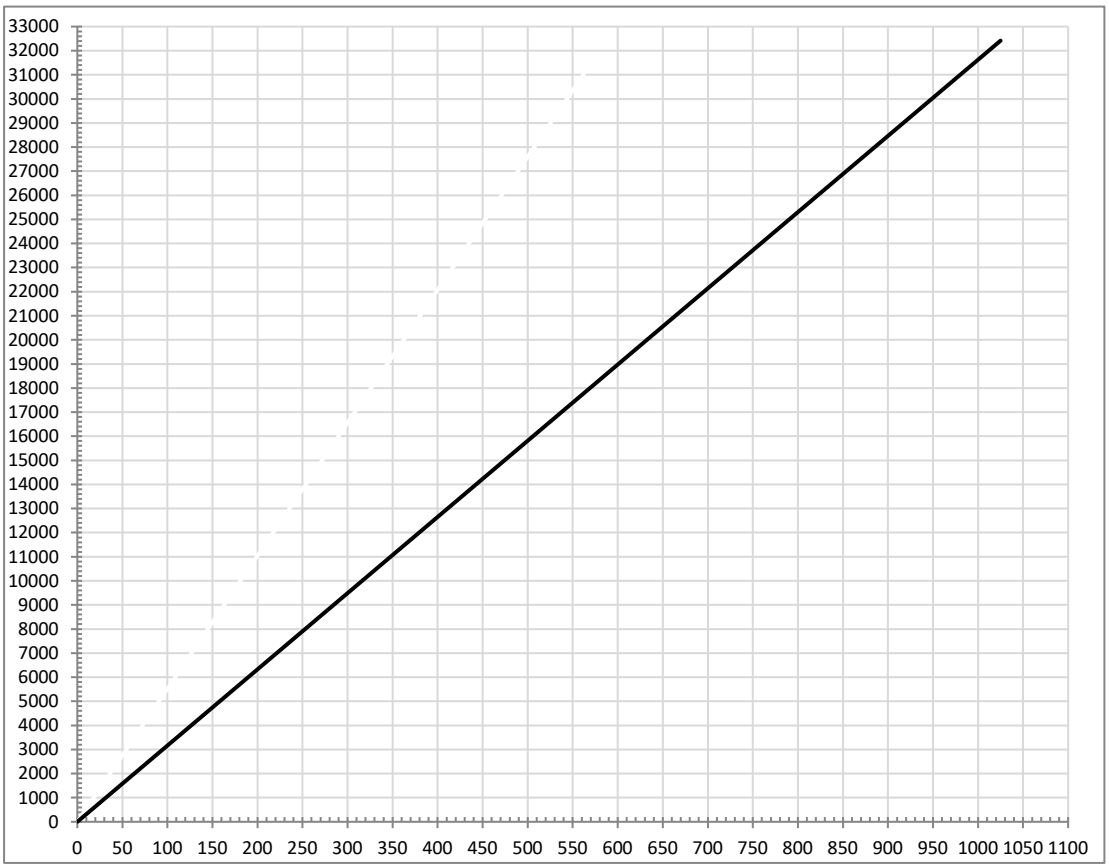

DC-BUS Battery voltage

Measuring tolerance +/-2 %

Example for settings on the BAMOCAR			
DC-BUS max. ($0xA5_H$)	for limit voltage	Num 0x0B	Bemerkung
144 %	750 V=	23625	1 % corresponds 5,2 V
135 %	700 V=	22050	
DC-BUS min. ($0xA5_L$)	for undervoltage		
116 %	600 V=	18900	
58 %	300 V=	9450	

6.2 Power amplifiers – temperature

T IGBT	
°C	[0x4A]
125	28744
120	28440
115	28104
110	27720
105	27296
100	26824
95	26288
90	25704
85	25040
80	24312
75	23504
70	22616
65	21640
60	20584
55	19448
50	18224
45	16944
40	15600
35	14216
30	12816
25	11424
20	10048
15	8736
10	7488
5	6328
0	5280
-5	4344
-10	3520
-15	2816
-20	2216
-25	1728
-30	1320

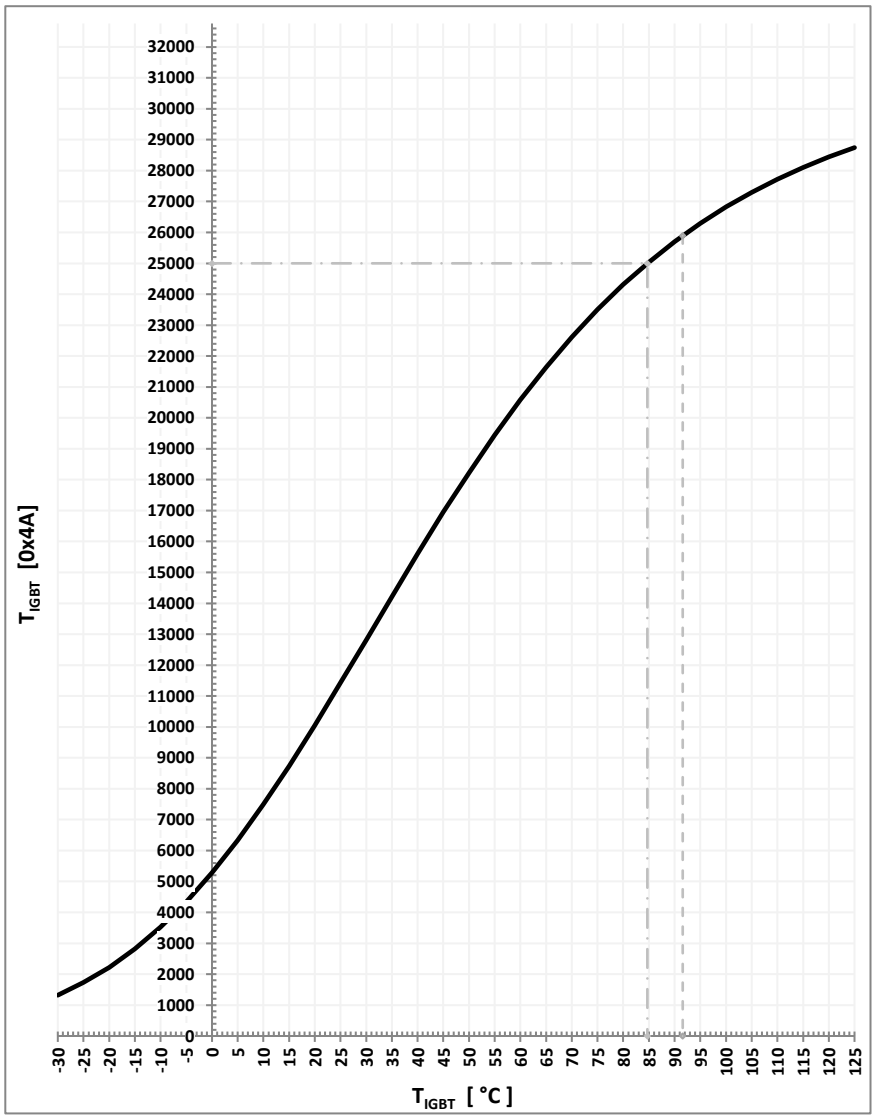

Warning overtemperature at 85 °C (Num 25000)
Error message overtemperture at 91 °C (Num 26000)
The current reduction, depending on the temperature, is set with the parameters I-red-TD (0x58) and I-red-TE (0x4C) programmed (see Manual NDrive).
Strom – Istwert

BAMOCAR	**I 100 %**	**Calibration Nominal current** I-device			**Peak current** DC blocked	
Maximum value +/- 11Bit	mV	Num	A~eff	A~eff	Num	A=pk
700/100	700	721	50	70,7	1081	106,1
700/160		576	80	113,1	865	169,7

The basic settings are protected in the parameter set.